REVISION				
REV	DESCRIPTION	DRAWN	APPR	DATE
IR	Initial Registration	M.H.SONG	I.C.KIM	2014.05.07.

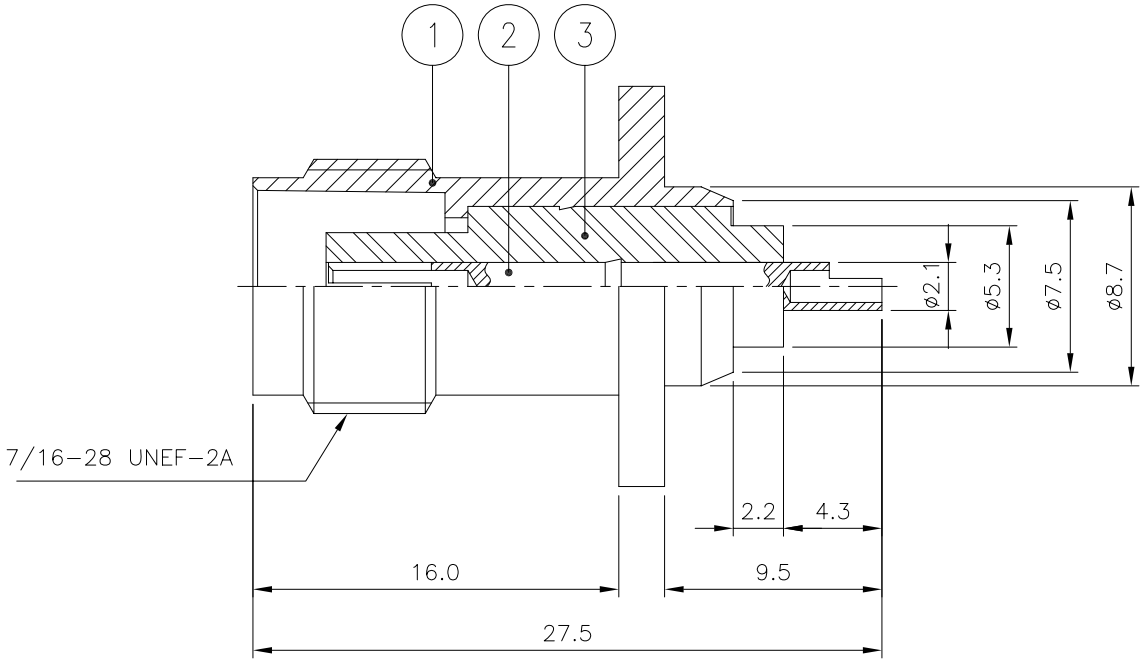

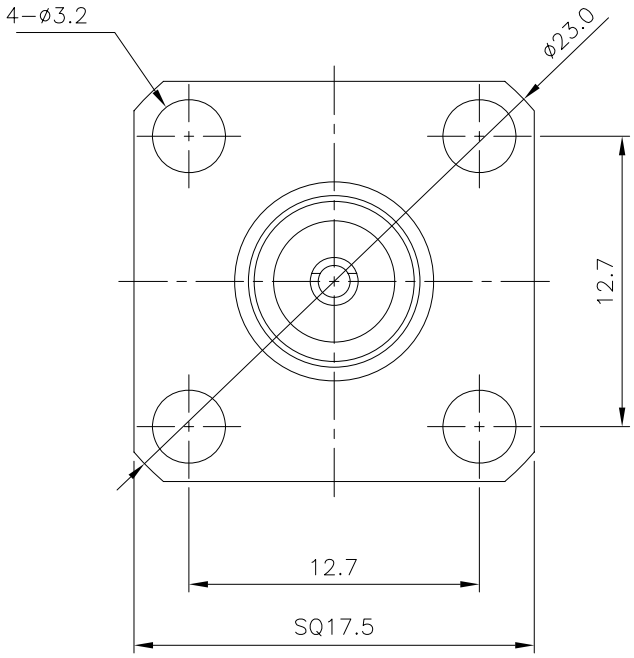

NO.	DESCRIPTION	Q'TY	MATERIAL	PLATING	CODE
3	INSULATOR	1	TEFLON		DIN02411-N/1
2	CONTACT	1	BeCu	Gold Plate	DCT03163-5/1
1	BODY	1	MBsBD	Gold Plate	DBD03662-5/1

TOLERANCE	Decimal ±0.1	DATE	2014. 07. 04.
	Angle ±1°	APPROVED BY	I.C.KIM
		CHECKED BY	-
MATERIAL		DRAWN BY	M.H.SONG
FINISH		SCALE 3/1	UNIT mm

KJ COMTECH
KJ COMTECH CO.,LTD.
RF & MICROWAVE TECHNOLOGY
Tel : 82-32-347-8015
Fax : 82-32-347-8017

TITLE
TNC50 SOLDER END JS-4H

A4

DWG NO. CN00416-7/2

REVISION I R

SHEET 1 of 1