## REVISION

| REV | DESCRIPTION | DRAWN | APPR | DATE |
|---|---|---|---|---|
| IR | Initial Registration | I.C.KIM | | 2016.10.17. |
| 1 | [설변처리No.201803-0008] 상대품 체결시 가스켓 눌림현상 없음 -바디 ,캡 수정 | S.Y.EUN | I.C.KIM | 2018.03.19. |
| 2 | PIPE 압착 후 회전 방지로 인한 PIPE 코드 변경 | S.Y.EUN | I.C.KIM | 2018.06.27. |
| 3 | [설변No.202001-0001] Ass'y후 이탈 및 회전 방지로 인한 압착부 형상변경 | S.Y.EUN | I.C.KIM | 2020.01.06. |

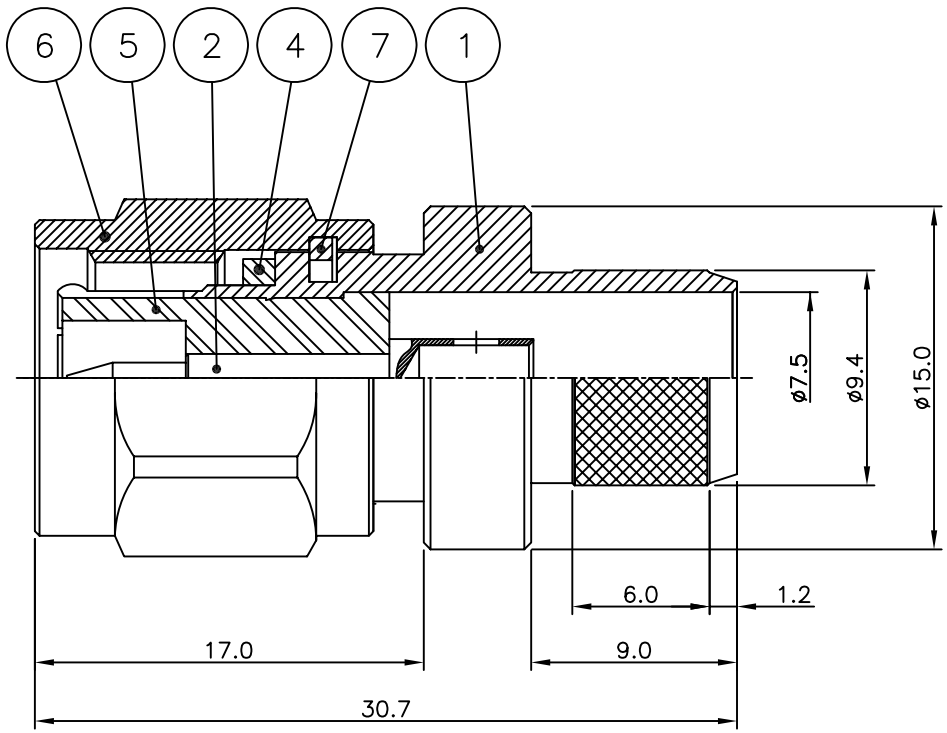


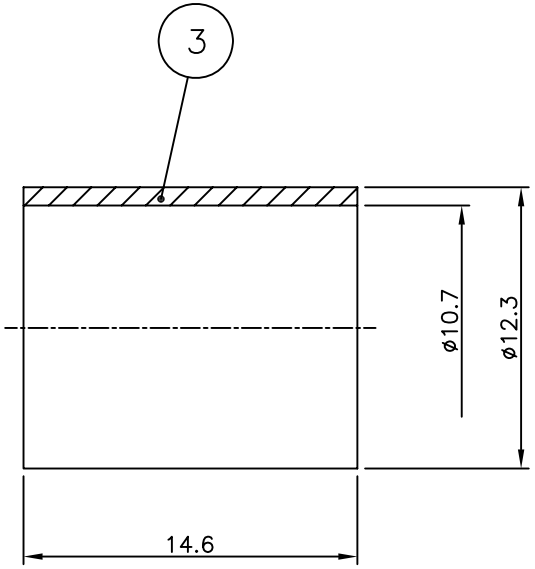


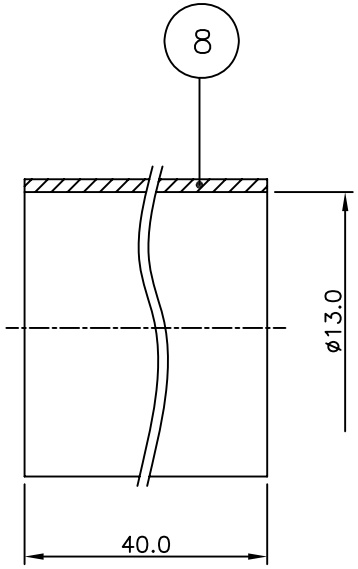


| | NO. | DESCRIPTION | Q'TY | MATERIAL | PLATING | CODE |
|---|---|---|---|---|---|---|
| | 8 | BONDING TUBE | 1 | | | ATU00013-N/1 |
| | 7 | SPRING RING | 1 | SUS | Passivated | DSR00024-5/1 |
| 1 | 6 | CAP | 1 | MBsBD C3604BD-F | Nickel Plated | DCU00135-5/6 ~~DCU00135-5/1~~ |
| | 5 | INSULATOR | 1 | TEFLON | | DIN01734-5/1 |
| | 4 | GASKET | 1 | SILICON RUB | | DGK00008-N/1 |
| 2 | 3 | FERRULE | 1 | MBsBD C3604BD-F | Nickel Plated | DFE00076-5/1 ~~DFE00070-5/1~~ |
| | 2 | CONTACT | 1 | MBsBD C3604BD-F | Gold Plated | DCT02213-5/1 |
| 3 1 | 1 | BODY | 1 | SUS | Passivated | DBD02701-5/9 ~~DBD02701-5/7~~ ~~DBD02701-5/3~~ |

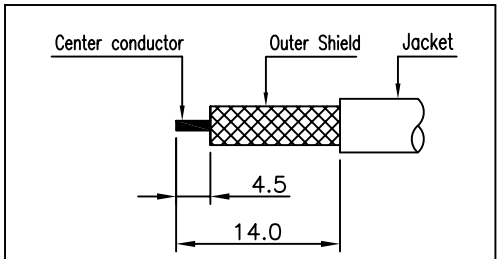


CABLE 탈피도

*ELECTRICAL SPEC*

1. Freauency Range : DC ~ 3GHz
2. Im pedance : 50Ω
3. V.S.W.R.(Max) : 1.2

| | | | |
|---|---|---|---|
| TOLERANCE | Decimal ±0.1 | DATE | 2020. 01. 06. |
| | Angle ±1° | APPROVED BY | I.C.KIM |
| | | CHECKED BY | |
| MATERIAL | - | DRAWN BY | S.Y.EUN |
| FINISH | - | SCALE 3/1 | UNIT mm |


KJ COMTECH
KJ COMTECH CO.,LTD.
RF & MICROWAVE TECHNOLOGY
Tel : 82-32-347-8015
Fax : 82-32-347-8017


TITLE: TNC50 CABLE PS LMR400

A4 | DWG NO. CN00380-7/3 | REVISION 3 | SHEET 1 of 1