REVISION				
REV	DESCRIPTION	DRAWN	APPR	DATE
IR	Initial Registration	S.Y.EUN	I.C.KIM	2017.06.20.

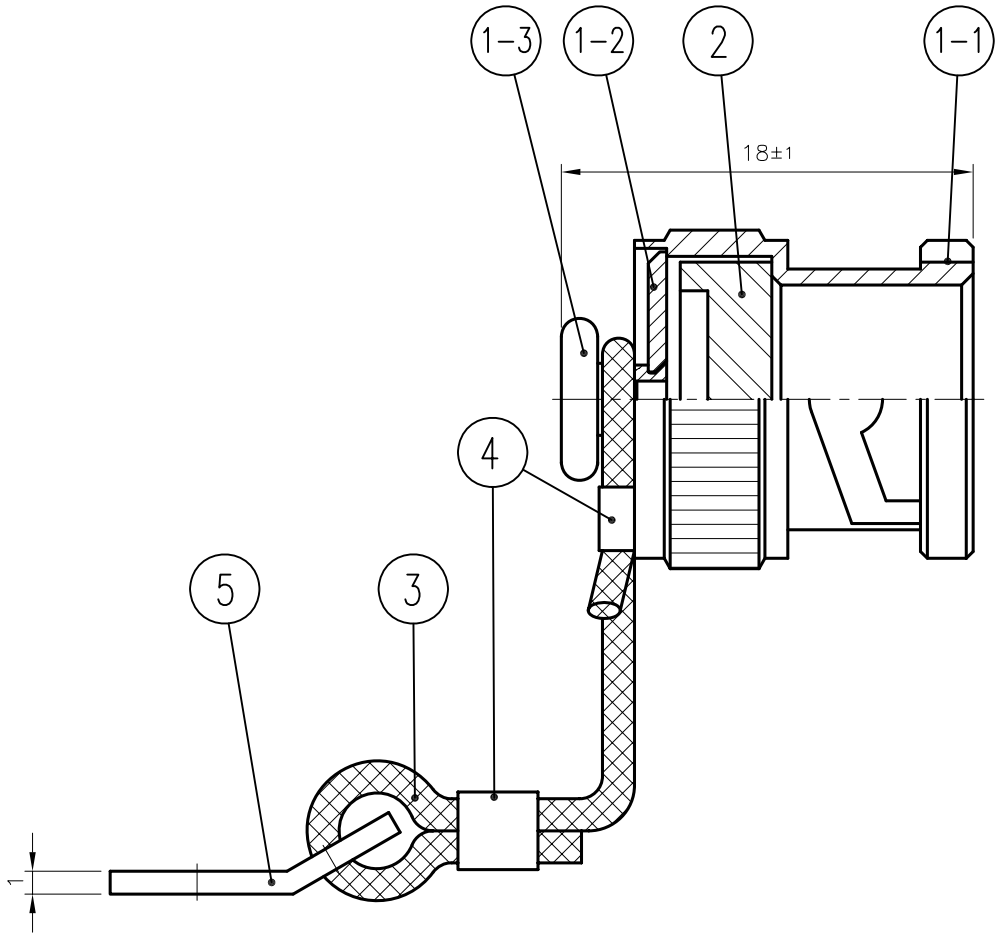

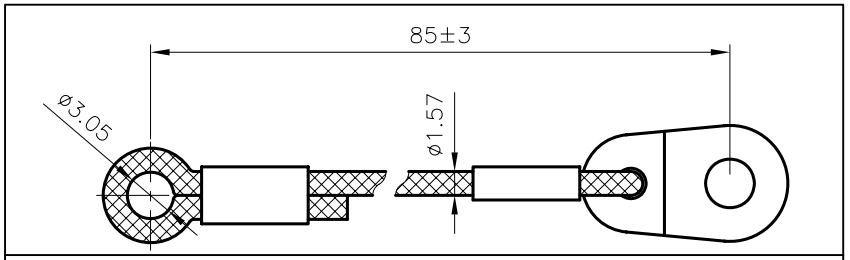

[ROPE & FERRULE]SCALE 2 :1

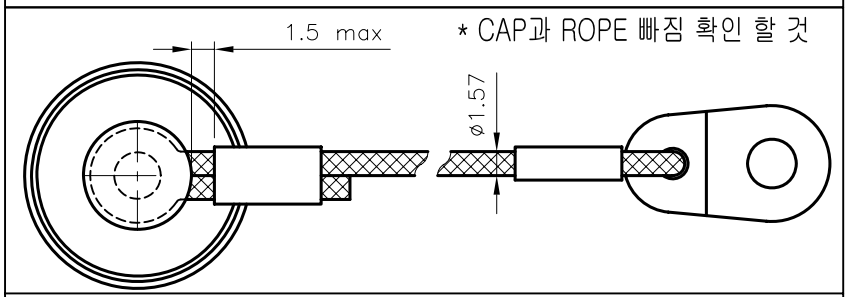

CAP과 ROPE FERRULE 삽입 후 간격

NO.		DESCRIPTION	Q'TY	MATERIAL	PLATING	CODE	
5		TERMINAL	1	AL	Khaki Color Plate	DTE00002-5/1	
4		FERRULE	2	MBsBD C3604BD-F	Black Chromium	DFE00039-5/1	
3		ROPE	1	NYLON	Khaki Color Plate	DRP00001-N/2	
2		GASKET	1	SILICONE		DGK00066-N/1	
1	1-3	RIVET	1	MBsBD C3604BD-F	Khaki Color Plate	DBB00514-5/2	DRV00003-1/1
	1-2	WASHER	1	MBsBD C3604BD-F	Khaki Color Plate		DWA00026-3/1
	1-1	BNC CAP	1	MBsBD C3604BD-F	Khaki Color Plate		DCU00044-3/1

TOLERANCE	Decimal ±0.1	DATE 2017. 06. 20.	KJ COMTECH CO.,LTD.	RF & MICROWAVE TECHNOLOGY Tel : 82-32-347-8015 Fax : 82-32-347-8017
	Angle ±1°	APPROVED BY I.C.KIM		
MATERIAL		CHECKED BY	TITLE BNC50 PROTECIVE PS-Dust Cap (Chain)	
		DRAWN BY S.Y.EUN		
FINISH		SCALE 3/1 / UNIT mm	A4	DWG NO. CN00297-7/2
				REVISION I R / SHEET 1 of 1