REVISION		
REV	DESCRIPTION	DATE
IR	최초 개정	2009. 01. 19.
1	BODY 일체형 변경으로 인한 완제품 CODE 폐기 및 BODY 모따기 수정	2016. 01. 28.
2	[설변처리No.201606-0001]Cover 들뜸 및 비정상적으로 안착되는 현상으로 인한 Cover CODE 변경	2016. 06. 09.

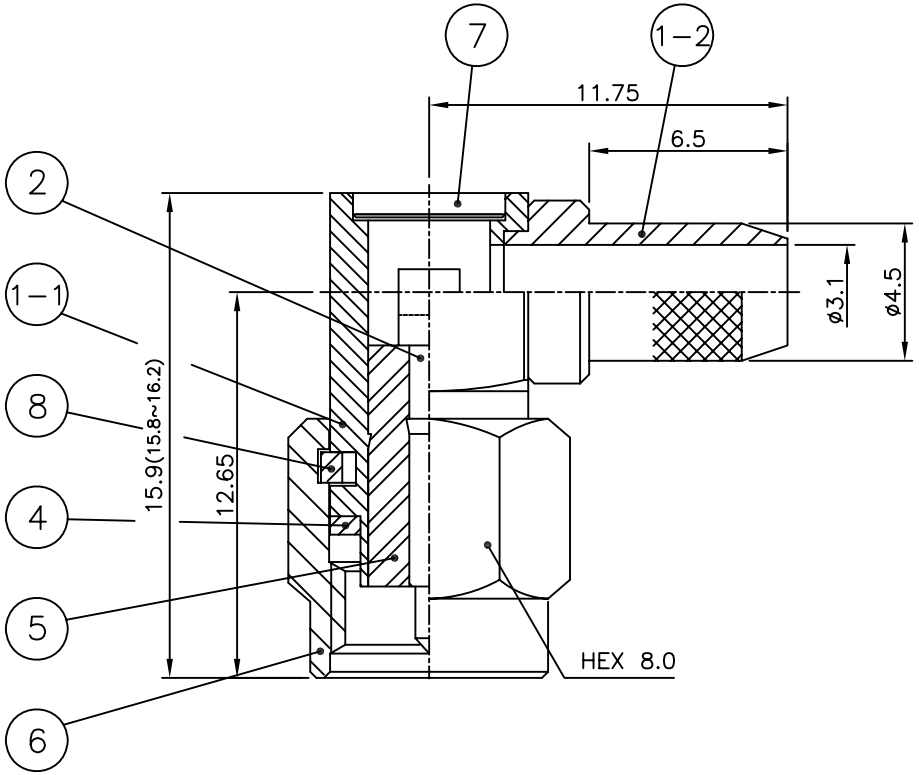

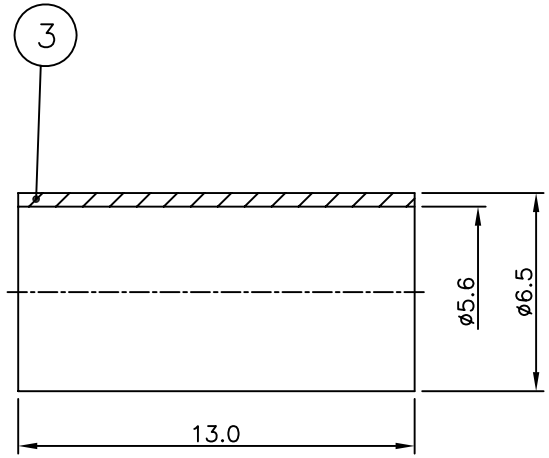

NO.		DESCRIPTION	Q'TY	MATERIAL	PLATING	CODE	
8		SPRING RING	1	SUS	부동태 처리	DSR00002-5/1 (R2001)	
2 7		COVER	1	MBsBD	Gold Plate	DCO00026-5/2 ~~DCO00031-5/1 (L2013)~~	
6		COUPLING CAP	1	MBsBD	Nickel Plate	DCU00005-5/2 (K2011)	
5		INSULATOR	1	TEFLON	White	DIN00154-N/1 (H2296)	
4		GASKET	1	TEFLON	White	DGK00004-N/1 (G2001)	
3		FERRULE	1	MBsBD	Nickel Plate	DFE00059-5/1 (F2027)	
2		CONTACT	1	MBsBD	Gold Plate	DCT00301-5/1 (E2100)	
1	1-2	원형 BODY	1	MBsBD	Gold Plate	DBB00061-5/1	DBD01302-1/1 (D2099B)
1	1-1	사각 BODY	1	MBsBD	Gold Plate		DBD00215-3/1 (D2099A)

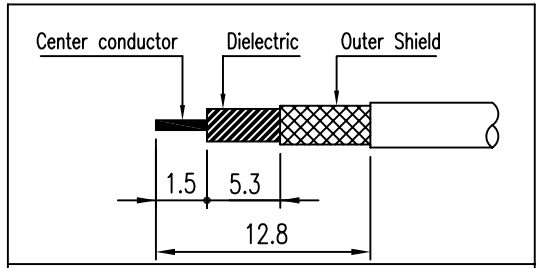

* CABLE 탈피도

TOLERANCE	Decimal ±0.2	DATE	2016. 06. 09.
	Angle ±1°	APPROVED BY	I.C.KIM
MATERIAL	-	CHECKED BY	H.J.LEE
		DRAWN BY	C.K.KIM
FINISH	-	SCALE 4/1	UNIT mm

KJ COMTECH
KJ COMTECH CO.,LTD.
RF & MICROWAVE TECHNOLOGY
Tel : 82-32-347-8015
Fax : 82-32-347-8017

TITLE
SMA50 CABLE PL RG400(50Ω)

A4 | DWG NO. CN00126-7/2 | REVISION 2 | SHEET 1 of 1