REVISION

REV	DESCRIPTION	DRAWN	APPR	DATE
IR	Initial Registration	E.H.KIM	S.J.YOUN	2003.12.02.
1	[설변처리No.201307-0002] 원가절감 (BODY 은땜 -> 억지끼움 조립 변경)	E.H.KIM	I.C.KIM	2013.07.09.
2	BODY 일체형 으로 인한 완제품 CODE 폐기 및 BODY 모따기 수정	C.K.KIM	I.C.KIM	2016.01.28.
3	[설변처리No.201606-0001]Cover 들뜸 및 비정상적으로 안착되는 현상으로 인한 Cover CODE 변경	C.K.KIM	I.C.KIM	2016.06.09.
4	커넥터 압착부 바디 부러짐 현상 방지로 인한 R추가	S.Y.EUN	I.C.KIM	2021.12.16.

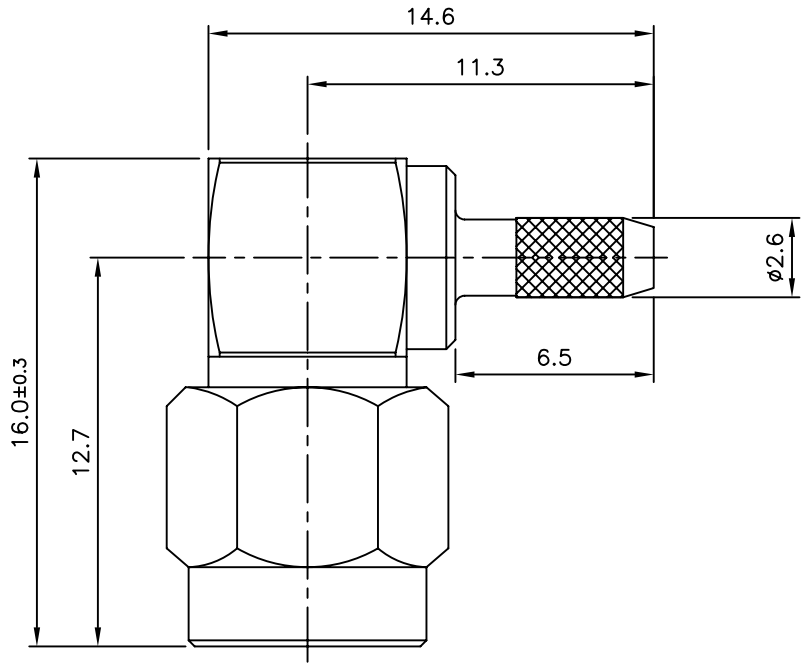

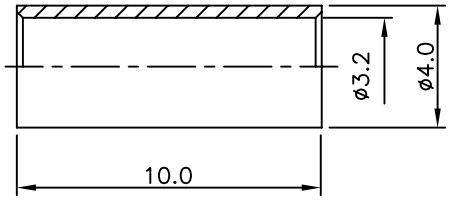

	NO.	DESCRIPTION	Q'TY	MATERIAL	PLATING	CODE	
	8	SPRING RING	1	SUS	부동태 처리	DSR00002-5/1 (R2001)	
3	7	COVER	1	MBsBD	Gold Plate	DCO00026-5/2 ~~DCO00031-5/1 (L2013)~~	
	6	COUPLING CAP	1	MBsBD	Gold Plate	DCU00005-5/1 (K2001)	
	5	INSULATOR	1	TEFLON	White	DIN00090-N/1 (H2019)	
	4	GASKET	1	SILICONE RUB		DGK00004-N/1 (G2001)	
	3	FERRULE	1	MBsBD	Nickel Plate	DFE00034-5/1	
	2	CONTACT	1	MBsBD	Gold Plate	DCT00300-5/1 (E2110)	
4 2 1	1 1-2	원형 BODY	1	MBsBD	Gold Plate	DBB00003-5/1	DBD01283-3/1 (D2109B)
1	1-1	사각 BODY	1	MBsBD	Gold Plate		DBD00216-3/1 (D2109A)

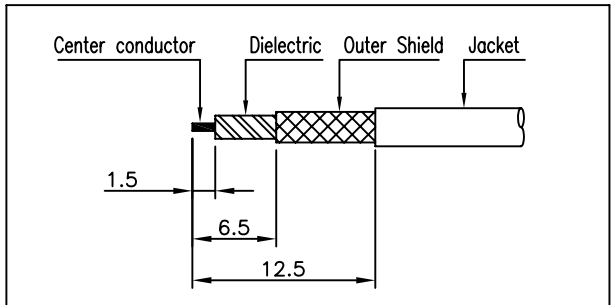

CABLE 탈피도

TOLERANCE	Decimal ±0.2	DATE	2021. 12. 16.
	Angle ±1°	APPROVED BY	I.C.KIM
		CHECKED BY	
MATERIAL	-	DRAWN BY	S.Y.EUN
FINISH	-	SCALE 4/1	UNIT mm

KJ COMTECH
KJ COMTECH CO.,LTD.
RF & MICROWAVE TECHNOLOGY
Tel : 82-32-347-8015
Fax : 82-32-347-8017

TITLE
SMA50 CABLE PL RG316(50Ω)

A4 | DWG NO. CN00123-7/1 | REVISION 4 | SHEET 1 of 1