REVISION				
No.	DESCRIPTION	DRAWN	APPR	DATE
IR				
1				
2				
3				

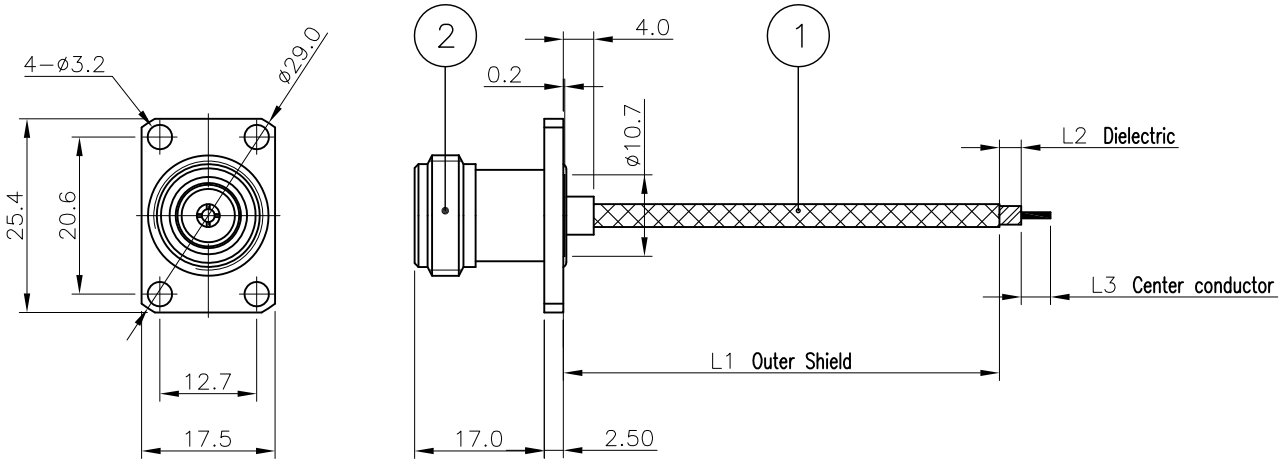

Notes

1. RoHS & Pb-FREE
2. CONNECTOR FINISHES
   2-1. N50 JS-4H----▶ ▷BODY : Nickel Plating
   CONTACT : Gold Plating

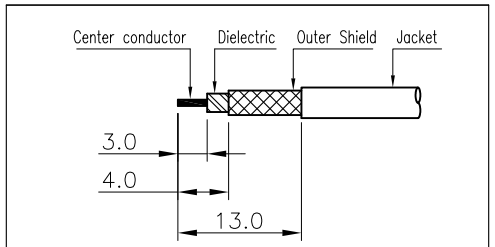

2번 CONN 탈피도

2	CONNECTOR	1	KJ COMTECH	CN03269-7/6	N50 JS-4H
1	COAXIAL CABLE		EXPANTEL	ACA00029-N/1	141F
NO.	DESCRIPTION	Q'TY	VENDER	PART NO.	RAMARKS

CUSTOMER

CUSTOMER CODE

CABLE LENGTH TOLERANCE
0 ~ 1000mm : +5, -0
1000 ~ 2000mm : +10, -0
2000 ~ 3000mm : +15, -0
3000 ~ 4000mm : +20, -0
4000 ~ 5000mm : +25, -0
5000 ~ : +10%

DATE	2020. 07. 13.
APPROVED BY	I.C.KIM
CHECKED BY	
DRAWN BY	S.Y.EUN
CHECKED BY	
SCALE	N/S
UNIT	mm

KJ COMTECH
KJ COMTECH CO.,LTD.
RF & MICROWAVE TECHNOLOGY
Tel : 82-32-347-8015
Fax : 82-32-347-8017

TITLE: CABLE ASS'Y

A4

DWG NO.	CF01507-7/1
DETAIL NO.	
REVISION	3
SHEET	1 of 1