REVISION

No.	DESCRIPTION	REV	DRAWN	APPR	DATE
IR	Initial Registration	IR	E.H.KIM	I.C.KIM	2014. 07. 23.
1	[설변 No.201411-0002] 업체요청 (핀 변경)	1	S.M.LEE	I.C.KIM	2014. 11. 10.
2	[설변 No.201601-0006] PIN No. 표기 수정	2	H.J.LEE	I.C.KIM	2016. 01. 12.

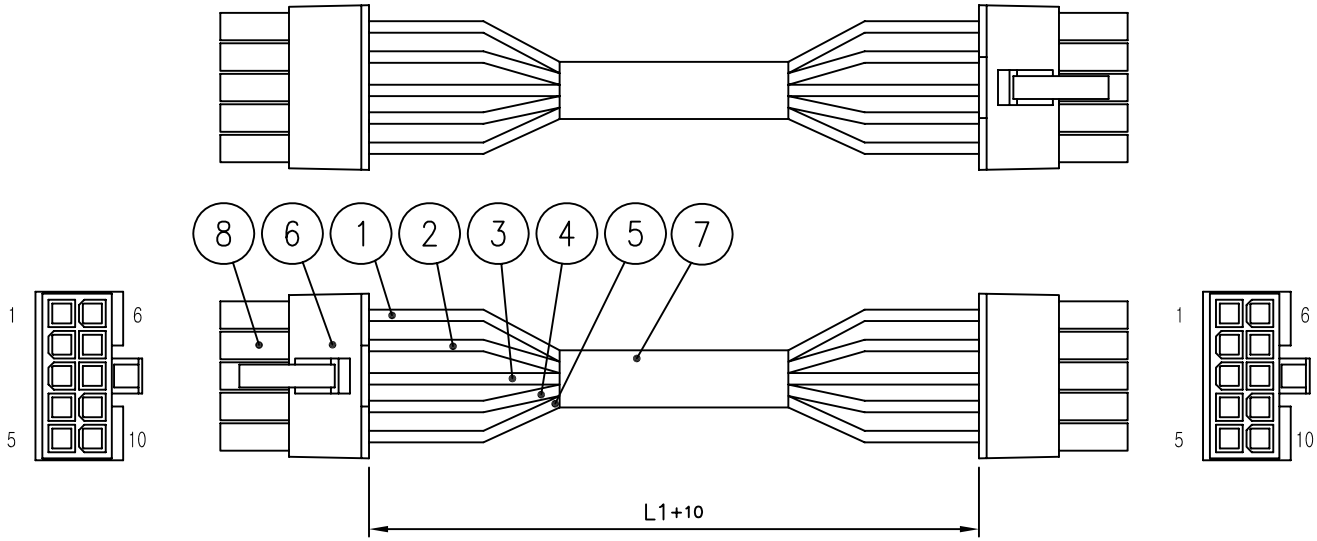

	A		B
1	White	↔	1 White
2	Yellow	↔	2 Yellow
3	Red	↔	3 Red
4	Brown	↔	4 Brown
5	Black	↔	5 Black
6	White	↔	6 White
7	Yellow	↔	7 Yellow
8	Red	↔	8 Red
9	Brown	↔	9 Brown
10	Black	↔	10 Black

NO.	DESCRIPTION	Q'TY	SPEC	PART NO.	RAMARKS
8	TERMINAL PIN	20	MOLEX	DCN00115-N/1	5556T
7	MARKING TUBE	1	LS TUBE	ATU00220-N/1	Ø8.0X30_White
6	HOUSING	2	MOLEX	DCN00146-N/1 ~~DCN00114-N/1~~	5557-10R ~~5557-8R~~
5	CABLE	2	UL1333	ACA00274-N/1	AWG#20_Black
4	CABLE	2	UL1333	ACA00271-N/1	AWG#20_Brown
3	CABLE	2	UL1333	ACA00270-N/1	AWG#20_Red
2	CABLE	2	UL1333	ACA00272-N/1	AWG#20_Yellow
1	CABLE	2	UL1333	ACA00276-N/1	AWG#20_White

CUSTOMER

CUSTOMER CODE

CABLE LENGTH TOLERANCE
0 ~ 1000mm : +5, -0
1000 ~ 2000mm : +10, -0
2000 ~ 3000mm : +15, -0
3000 ~ 4000mm : +20, -0
4000 ~ 5000mm : +25, -0
5000 ~ : +10%

DATE	2016. 01. 12.
APPROVED BY	I.C.KIM
CHECKED BY	-
DRAWN BY	H.J.LEE
CHECKED BY	
SCALE	N/S
UNIT	mm

KJ COMTECH
KJ COMTECH CO.,LTD.
RF & MICROWAVE TECHNOLOGY
Tel : 82-32-347-8015
Fax : 82-32-347-8017

TITLE 일본향
LPSU-LDTU_POWER_CABLE_SUBL

A4

DWG NO.	CD00086-7/1
DETAIL NO.	
REVISION	2
SHEET	1 of 1