REVISION				
REV	DESCRIPTION	DRAWN	APPR	DATE
IR	Initial Registration	S.H.KIM		2024.12.04.

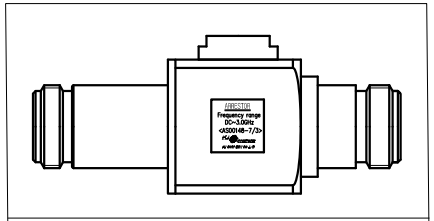

LABEL 부착

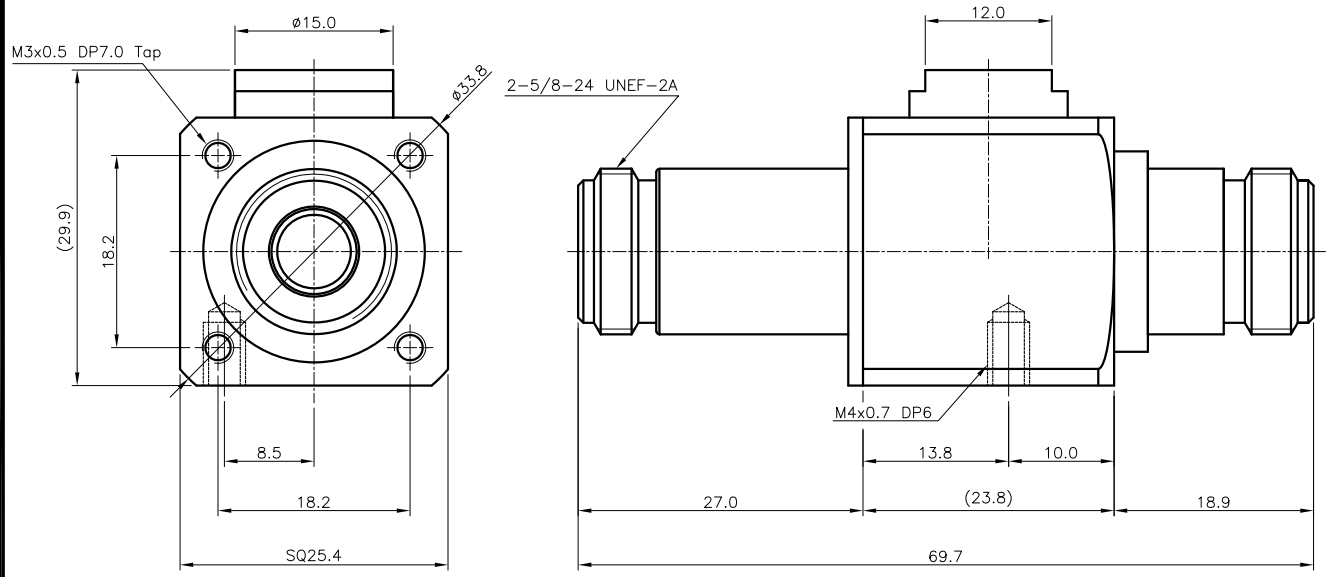

■ ELECTRICAL SPECIFICATIONS

Frequency Range : DC~3GHz
Insertion Loss (Min.) : -0.3dB
V.S.W.R (Max.) : 1.2
Impedance : 50Ω
방수 : IP67
Impulse Discharge Voltage : 2.5kA (8/20㎲)
DC Breakdown Voltage : 2500V ± 20%
Operating Temperature Range : -40.0℃ ~ +85.0℃

NO.	DESCRIPTION	Q'TY	MATERIAL	PLATING	CODE
14	EPOXY (경화제519)	1	—	—	CAD00021-N/2 (경화제_519)
13	EPOXY (주제519)	1	—	—	CAD00021-N/1(주제_519)
12	LABEL	1	은무데드롱		DLA00774-8/3
11	COVER	1	MBsBD C3604BD-F	Nickel Plate	DCS00063-5/7
10	GAS TUBE	1	—	—	DGT00021-N/1
9	INSULATOR	1	TEFLON		DIN03160-N/1
8	INSULATOR	1	TEFLON		DIN03053-N/1
7	GASKET	1	SILICONE RUB	RED	DGK00028-N/1
6	GASKET	1	SILICONE RUB	BLACK	DGK00079-N/1
5	GASKET	1	SILICONE RUB	RED	DGK00042-N/2
4	CONTACT	2	BeCu C17300	Gold Plate	DCT03664-5/1
3	CONTACT	1	MBsBD C3604BD-F	Gold Plate	DCT04155-5/1
2	BODY(B)	1	MBsBD C3604BD-F	Nickel Plate	DBD04660-5/1
1	BODY(A)	1	MBsBD C3604BD-F	Nickel Plate	DBD04659-5/3

TOLERANCE	Decimal ±0.3	DATE	2024. 12. 04.
	Angle ±1°	APPROVED BY	
		CHECKED BY	
MATERIAL		DRAWN BY	S.H.KIM
FINISH		SCALE 2/1	UNIT mm

KJ COMTECH
KJ COMTECH CO.,LTD.
RF & MICROWAVE TECHNOLOGY
Tel : 82-32-347-8015
Fax : 82-32-347-8017

TITLE ARRESTER NJ NJ (Gas) 50ohm

A3 DWG NO. AS00148-7/3
REVISION I R SHEET 1 of 1