REVISION				
REV	DESCRIPTION	DRAWN	APPR	DATE
1	Initial Registration	S.L.SON	J.H.YOUN	2015.02.11.
2	Bracket 추가 및 주파수 대역 변경	S.L.SON	J.H.YOUN	2015.10.01.
3	LOGO 변경 (KJ컴텍)	S.L.SON	J.H.YOUN	2015.10.14.

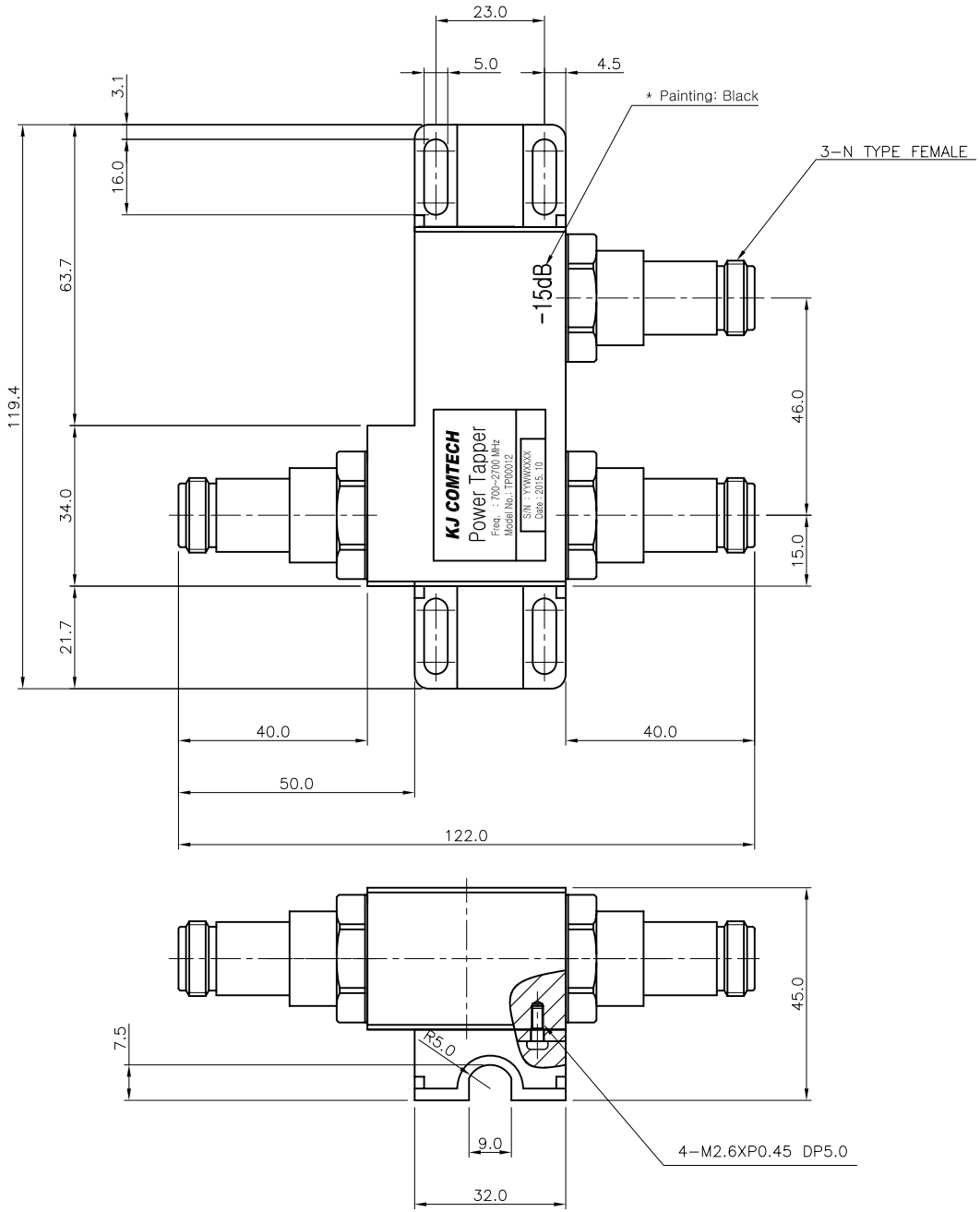

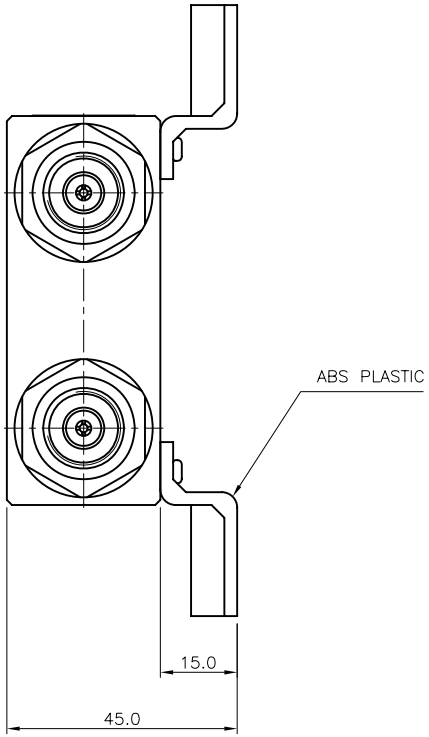

* ELECTRICAL SPECIFICATIONS
Frequency Range : 700.0 ~ 2700.0MHz
Tap Loss (Input <-> P2) : 15.0±0.8dB
Insertion Loss (Input <-> P1): 0.7dB(Max)
Input V.S.W.R (Max.) : 1.2 : 1
PIM (@43.0dBM 2Tone) : -155.0dBc
Power Handling (Max.) : 100.0W
Impedance : 50Ω

* MECHANICAL SPECIFICATIONS
HOUSING : A6061
CONNECTORS : MBsBD (SUCO Plate)
CONNECTORS PINS : Beryllium Copper (Silver Plate)
INSULATORS : TEFLON

TOLERANCE	Decimal ±0.3	DATE 2015. 10. 14.	KJ COMTECH CO.,LTD.	RF & MICROWAVE TECHNOLOGY Tel : 82-32-347-8015 Fax : 82-32-347-8017
	Angle ±1°	APPROVED BY J.H.YOUN		
		CHECKED BY T.J.KIM	TITLE 15dB POWER TAPPER	
MATERIAL A6061		DRAWN BY S.L.SON		
FINISH DIC-547		SCALE 1/1	UNIT mm	A3 DWG NO. TP00012-8/3 REVISION 3 SHEET 1 of 1