REVISION				
REV	DESCRIPTION	DRAWN	APPR	DATE
1	Initial Registration	S.L.SON	J.H.YOUN	2014.04.22.

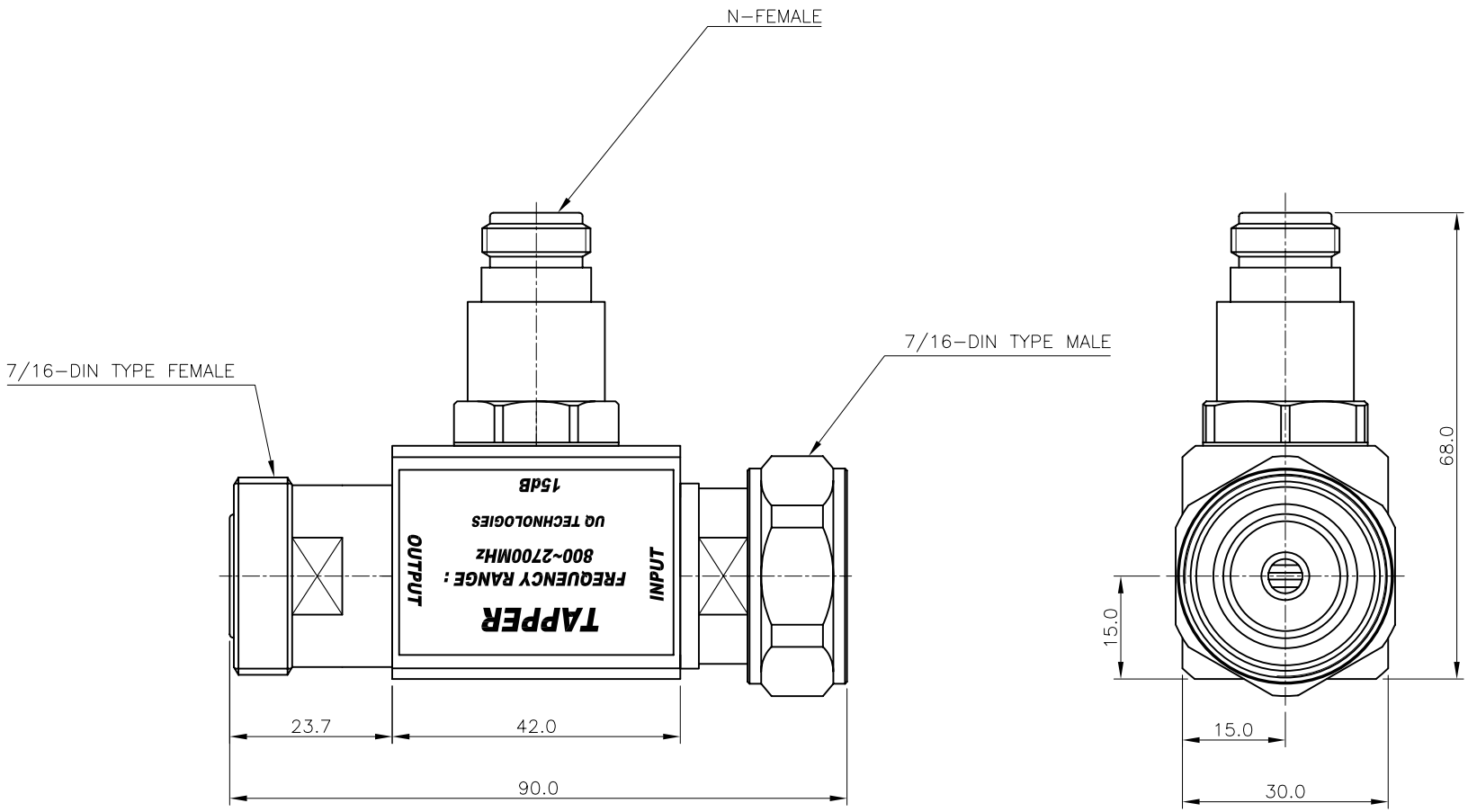

* ELECTRICAL SPECIFICATIONS
Frequency Range : 800.0 ~ 2700.0MHz
Tap Loss (Input <-> P2) : 15.0±0.8dB
Insertion Loss (Input <-> P1): 0.7dB(Max)
Input V.S.W.R (Max.) : 1.2 : 1
PIM (@43.0dBM 2Tone) : -155.0dBc
Power Handling (Max.) : 100.0W
Impedance : 50Ω

* MECHANICAL SPECIFICATIONS
HOUSING : MBsBD (SUCO Plate)
CONNECTORS : MBsBD (SUCO Plate)
CONNECTORS PINS : Beryllium Copper (Silver Plate)
INSULATORS : TEFLON

TOLERANCE	Decimal ±0.3	DATE 2014. 04. 22.		KJ COMTECH CO.,LTD.
	Angle ±1°	APPROVED BY	J.H.YOUN	RF & MICROWAVE TECHNOLOGY Tel : 82-32-347-8015 Fax : 82-32-347-8017
MATERIAL MBsBD		CHECKED BY	T.J.KIM	TITLE 15dB POWER TAPPER
		DRAWN BY	S.L.SON	
FINISH SUCO PLATE		SCALE 1/1	UNIT mm	A4 DWG NO. TP00006-7/1
				REVISION 1 SHEET 1 of 1