REVISION				
REV	DESCRIPTION	DRAWN	APPR	DATE
IR	Initial Registration	M.H.SONG	I.C.KIM	2013.12.16.
1	[설변No.201810-0003] 원가절감 및 MATING 개선으로 인한 링 삭제	S.Y.EUN	I.C.KIM	2018.10.10.
2	[설변No.202006-0005] 메이팅 표준화로 인한 링 재추가	S.Y.EUN	I.C.KIM	2020.06.17.

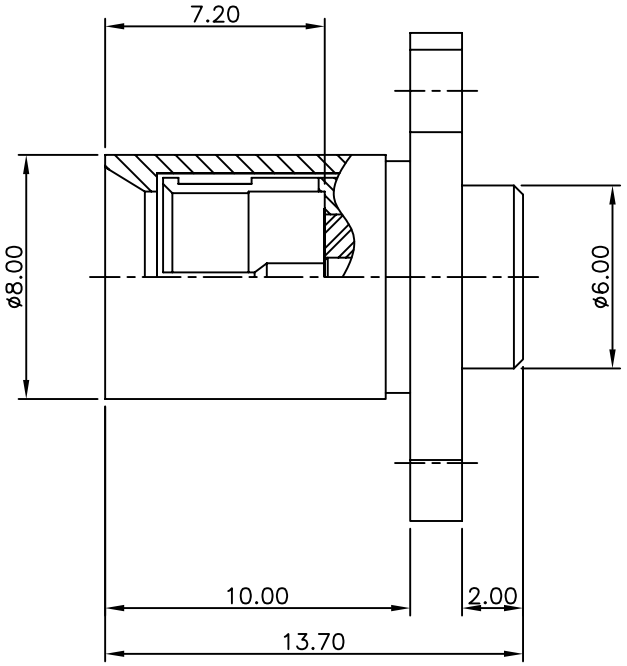

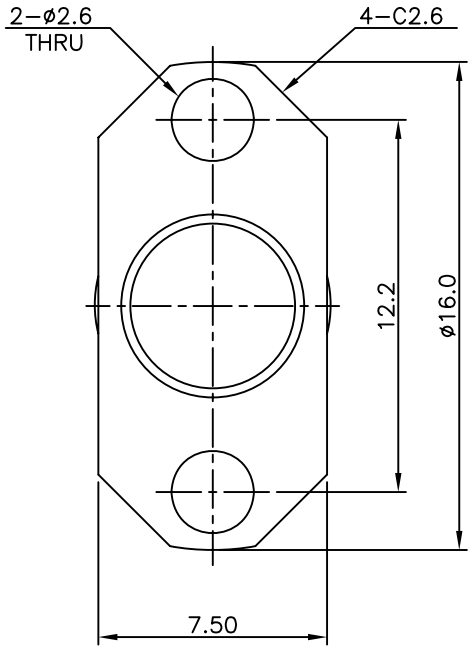

※ Coupling Cap 조립전 샘플 검사후 Coupling Cap 조립후 전수검사 진행할것.

ELECTRICAL DATA		
1	IMPEDANCE	50Ω Nominal
2	FREQUENCY	DC ~ 4GHz
3	V.S.W.R	1.2 : 1 (MAX)
4	RATING POWER	1 Watt

NO.	DESCRIPTION	Q'TY	MATERIAL	PLATING	CODE
7	RESISTOR	1	BeCu	Nickel Plate	DRE00057-N/1
6	SPRING RING	1	BeCu	Nickel Plate	DSR00007-5/1
5	JACK	1	MBsBD	Nickel Plate	DJA00119-5/1
4	CAP	1	MBsBD	Nickel Plate	DCU02214-5/1
3	INSULATOR	1	TEFLON		DIN01213-N/1
2	CONTACT	1	MBsBD	Gold Plate	DCT01869-5/1
1	BODY	1	MBsBD	Nickel Plate	DBD03522-5/1

TOLERANCE	Decimal ±0.1	DATE	2020. 06. 17.
	Angle ±1°	APPROVED BY	I.C.KIM
MATERIAL		CHECKED BY	
		DRAWN BY	S.Y.EUN
FINISH		SCALE 4/1	UNIT mm

KJ COMTECH
KJ COMTECH CO.,LTD.
RF & MICROWAVE TECHNOLOGY
Tel : 82-32-347-8015
Fax : 82-32-347-8017

TITLE: PDM(Φ5.5) PS-2H TERM

A4 | DWG NO. TM00143-7/1 | REVISION 2 | SHEET 1 of 1