REVISION		
REV	DESCRIPTION	DATE

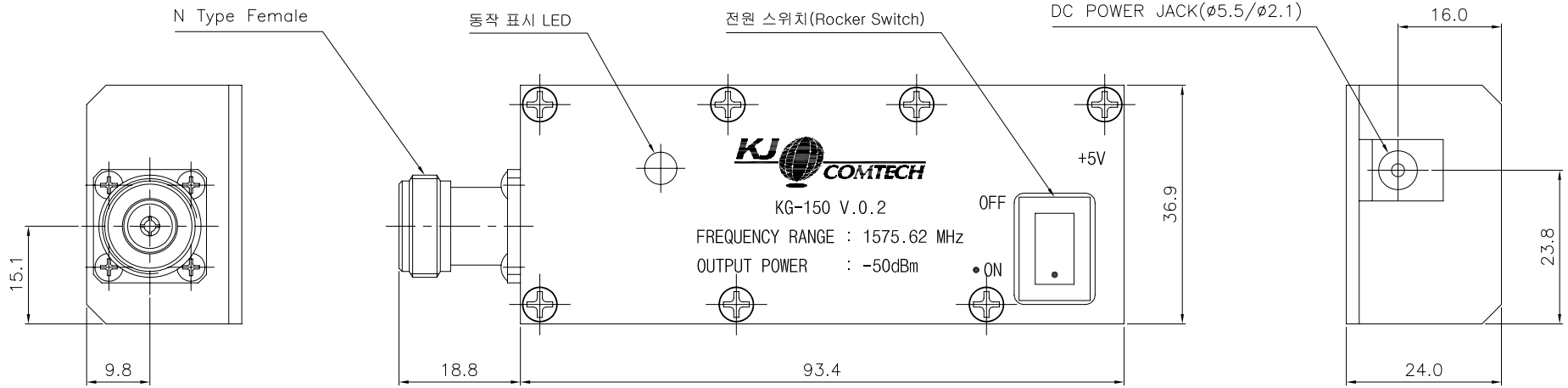

* ELECTRICAL SPECIFICATIONS

Parameter	Specification	Comment
Operating Frequency	1575.62MHz	
Output Level	-50±3dBm	
Nominal Impedance	50Ω	
Supply Voltage	+5V	
Connector	N-type Female	

* MECHANICAL SPECIFICATIONS
HOUSING : A6061(White Chromate)
CONNECTORS : MBsBD (Ni Plate)
CONNECTORS PINS : Beryllium Copper (Silver Plate)
INSULATORS : TEFLON
MARKING COLOR : BLACK

REVISION I R	NO.	DESCRIPTION	Q'TY	MATERIAL	PLATING	REMARKS
TOLERANCE Decimal ± 0.3, Angle ± 1°	DATE 2008. 5. 26.		KJ COMTECH KJ COMTECH CO.,LTD.	RF & MICROWAVE TECHNOLOGY Tel : 82-32-347-8015 Fax : 82-32-347-8017		
	APPROVED BY		TITLE 주파수 발생기			
	CHECKED BY					
MATERIAL A6061 T6	DRAWN BY					
FINISH White Chromate	SCALE 1/1	UNIT mm	A4	DWG NO. SG00003-7/1(KJ00025-7/1)		
				SHEET 1 OF 1		