REVISION		
REV	DESCRIPTION	DATE
IR	Initial Registration	2006.06.04.
A	LIMITER 추가로 인한 SPEC 재 지정	2009.06.17.

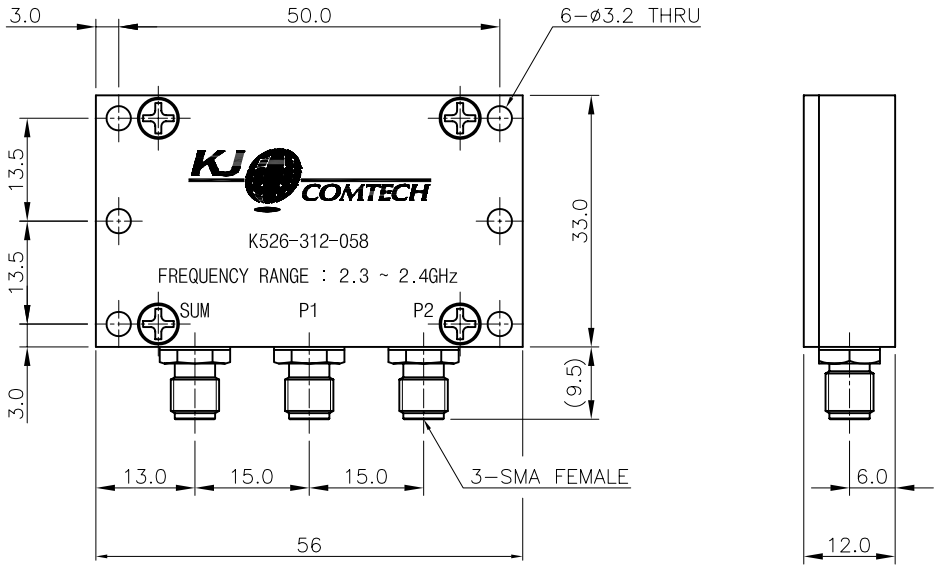

* ELECTRICAL SPECIFICATIONS

A Frequency Range : 2300.0 ~ 2400.0MHz
Insertion Loss (Max.) : 3.5 dB
V.S.W.R (Max.) : 1.43 : 1
Isolation (Min.) : 20.0dB
Power Handling (Max.) : 1.0W
Impedance : 50.0Ω
Limited Power (Max.) : 2.0dBm @ 10.0dBm (2.35GHz .CW)

* MECHANICAL SPECIFICATIONS

HOUSING : A6061 T6 (Yellow Chromate)
CONNECTORS : MBsBD (Nickel Plate)
CONNECTORS PINS : Beryllium Copper (Gold Plate)
INSULATORS : TEFLON

TOLERANCE	Decimal ±0.3	DATE 2009. 06. 17.		KJ COMTECH CO.,LTD. RF & MICROWAVE TECHNOLOGY Tel : 82-32-347-8015 Fax : 82-32-347-8017
	Angle ±1°	APPROVED BY	J.H.YOUN	TITLE 2WAY POWER DIVIDER
MATERIAL A6061 T6		CHECKED BY	M.H.LEE	
		DRAWN BY	K.I.CHO	A4 DWG NO. PD00104-7/2
FINISH Yellow Chromate		SCALE 1/1	UNIT mm	REVISION REV.A SHEET 1 of 1