REVISION		
REV	DESCRIPTION	DATE

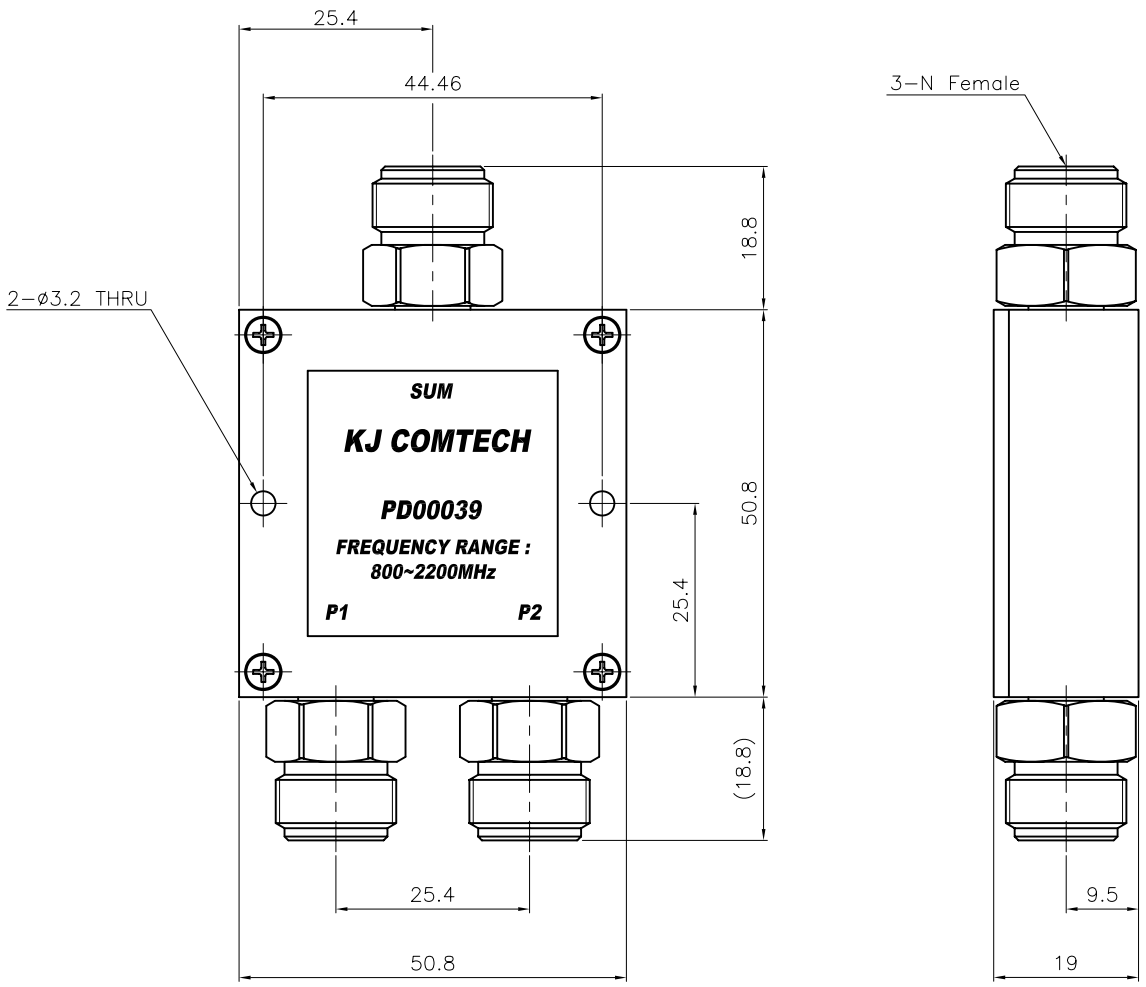

* ELECTRICAL SPECIFICATIONS
Frequency Range : 800.0 ~ 2200.0MHz
Insertion Loss (Max.) : 3.41dB
V.S.W.R (Max.) : Input 1.3 : 1,
Output 1.25 : 1
Isolation (Min.) : 20.0dB
Amplitude Unbalance (Max.) : 0.2dB
Phase Unbalance (Max.) : 2.0°
Power Handling (Max.) : 1.0W
Impedance : 50Ω

* MECHANICAL SPECIFICATIONS
HOUSING : A6061 T6 (White Chromate)
CONNECTORS : MBsBD (Nickel Plate)
CONNECTORS PINS : Beryllium Copper (Gold Plate)
INSULATORS : TEFLON

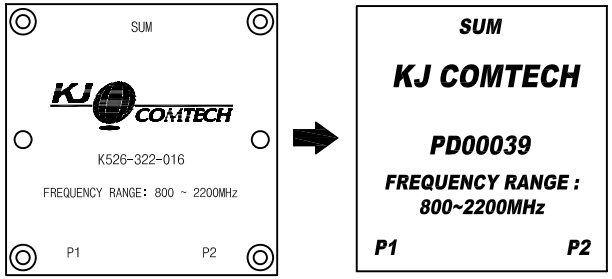

* KJ컴텍 내부코드양식 변경으로
제품 CODE 변경

REVISION I R		NO.	DESCRIPTION	Q'TY	MATERIAL	PLATING	REMARKS
TOLERANCE	Decimal ± 0.3	DATE	2005. 10. 8.	KJ COMTECH CO.,LTD.	RF & MICROWAVE TECHNOLOGY Tel : 82-32-347-8015 Fax : 82-32-347-8017		
	Angle ± 1°	APPROVED BY					
		CHECKED BY		TITLE 2WAY POWER DIVIDER			
MATERIAL A6061 T6		DRAWN BY					
FINISH White Chromate		SCALE 1/1	UNIT mm	A4	DWG NO. PD00039-7/1		
					SHEET 1 OF 1		