REVISION				
REV	DESCRIPTION	DRAWN	APPR	DATE
1	Initial Registration	K.I.CHO	J.H.YOUN	2011.11.23.

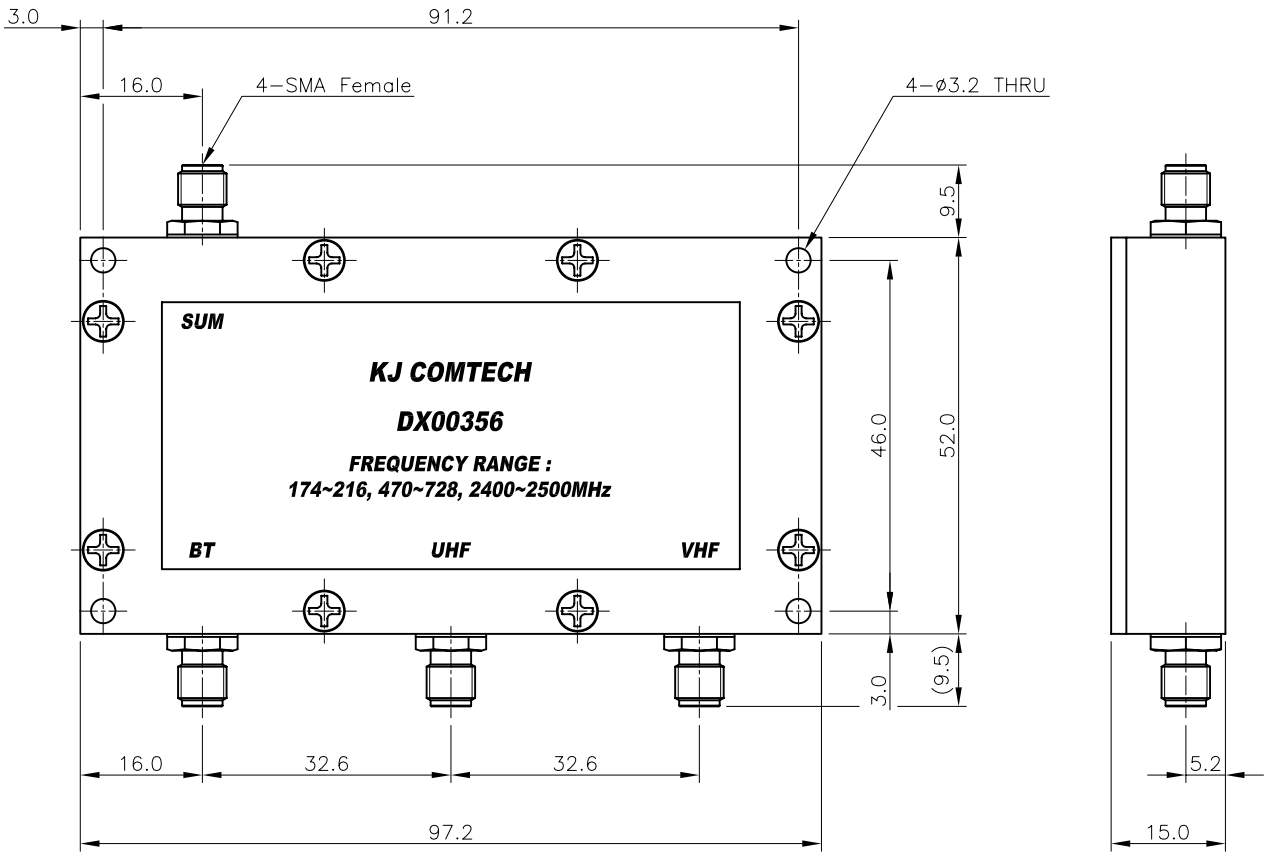

* ELECTRICAL SPECIFICATIONS

Parameter	Unit	Specification			Comments
Frequency	MHz	VHF	UHF	BT	
		174~216	470~728	2400~2500	
Insertion Loss	dB	1.5		1	Max.
Isolation	dB	50			Min.
In/Out VSWR		1.3:1			Max.
Handing Power	W	1			Max.
Impedance	Ω	50			Nominal

* MECHANICAL SPECIFICATIONS
HOUSING : A6061 T6 (White Chromate)
CONNECTORS : MBsBD (Nickel Plate)
CONNECTORS PINS : Beryllium Copper (Gold Plate)
INSULATORS : TEFLON

구 코드 : DX00356-7/1

TOLERANCE	Decimal ±0.3	DATE 2011. 11. 23.	KJ COMTECH CO.,LTD.	RF & MICROWAVE TECHNOLOGY Tel : 82-32-347-8015 Fax : 82-32-347-8017
	Angle ±1°	APPROVED BY J.H.YOUN		
		CHECKED BY I.C.KIM	TITLE MULTIPLEXER	
MATERIAL A6061 T6		DRAWN BY J.H.YOUN		
FINISH White Chromate		SCALE 1/1	UNIT mm	A4
		DWG NO. FT00567-7/1		
		REVISION 1	SHEET 1 of 1	