REVISION				
REV.	DESCRIPTION	DRAWN	APPR	DATE
1	Initial Registration	T.J.KIM	J.H.YOUN	2015.10.14.

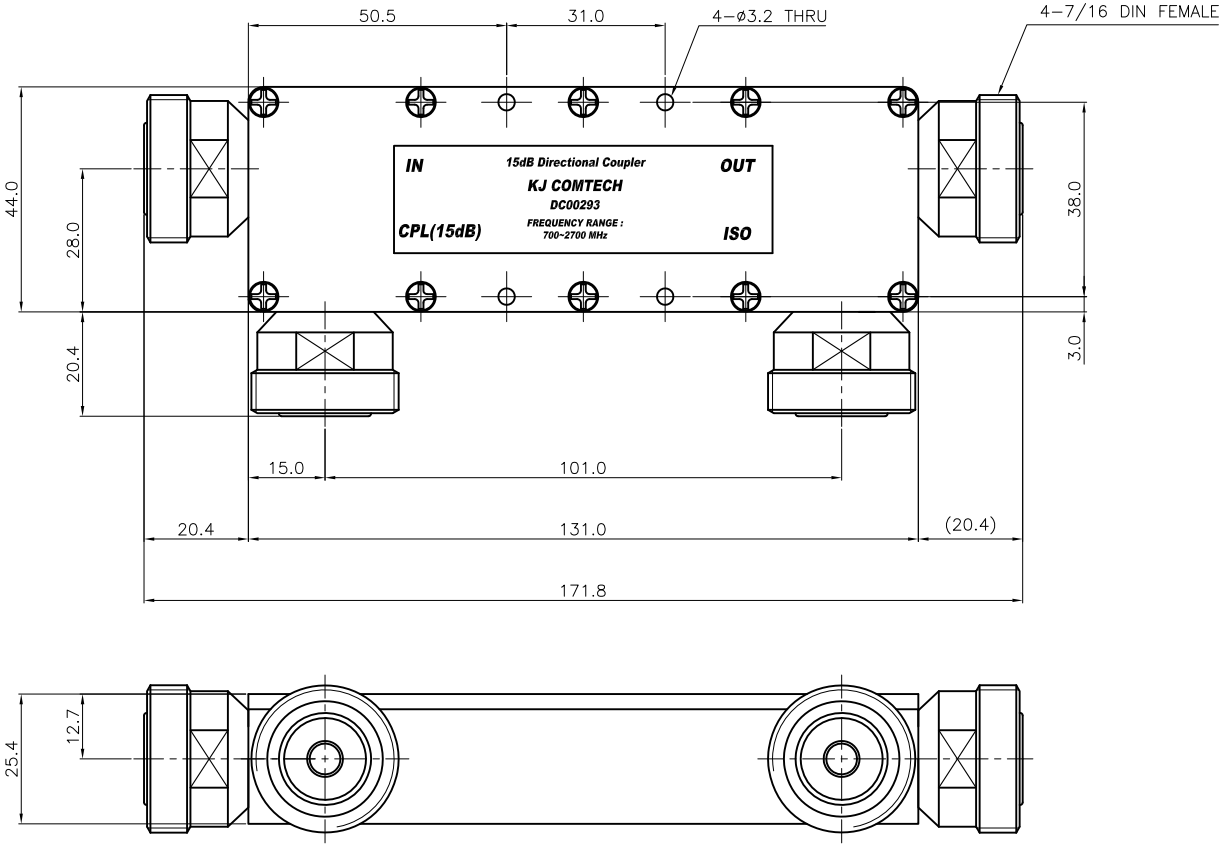

* ELECTRICAL SPECIFICATIONS
Frequency Range : 700~2700MHz
Insertion Loss (Max.) : 0.5dB
Input V.S.W.R (Max.) : 1.2 : 1
Coupling Value : 15 ± 0.8dB
Directivity (Min.) : 20dB
Power Handling (Max.) : 200.0W
PIMD (Max.) : -150dBc (@ 43dB 2 tone)
Impedance : 50Ω

* MECHANICAL SPECIFICATIONS
HOUSING : A6061 (DIC-582)
CONNECTORS : MBsBD (SUCO Plate)
CONNECTORS PINS : Beryllium Copper (Silver Plate)
INSULATORS : TEFLON

* ENVIRONMENTAL SPECIFICACTION
IP-68

TOLERANCE	Decimal ±0.3	DATE 2015. 10. 14.	KJ COMTECH CO.,LTD.	RF & MICROWAVE TECHNOLOGY Tel : 82-32-347-8015 Fax : 82-32-347-8017
	Angle ±1°	APPROVED BY J.H.YOUN		
		CHECKED BY S.L.SON	TITLE 15dB DIRECTIONAL COUPLER	
MATERIAL A6061 T6		DRAWN BY T.J.KIM		
FINISH DIC-582(BLACK)		SCALE 1/1	UNIT mm	A3 DWG NO. DC00293-6/1 REVISION 1 SHEET 1 of 1