REVISION				
REV	DESCRIPTION	DRAWN	APPR	DATE
1	Initial Registration	T.J.KIM	J.H.YOUN	2015.05.27.

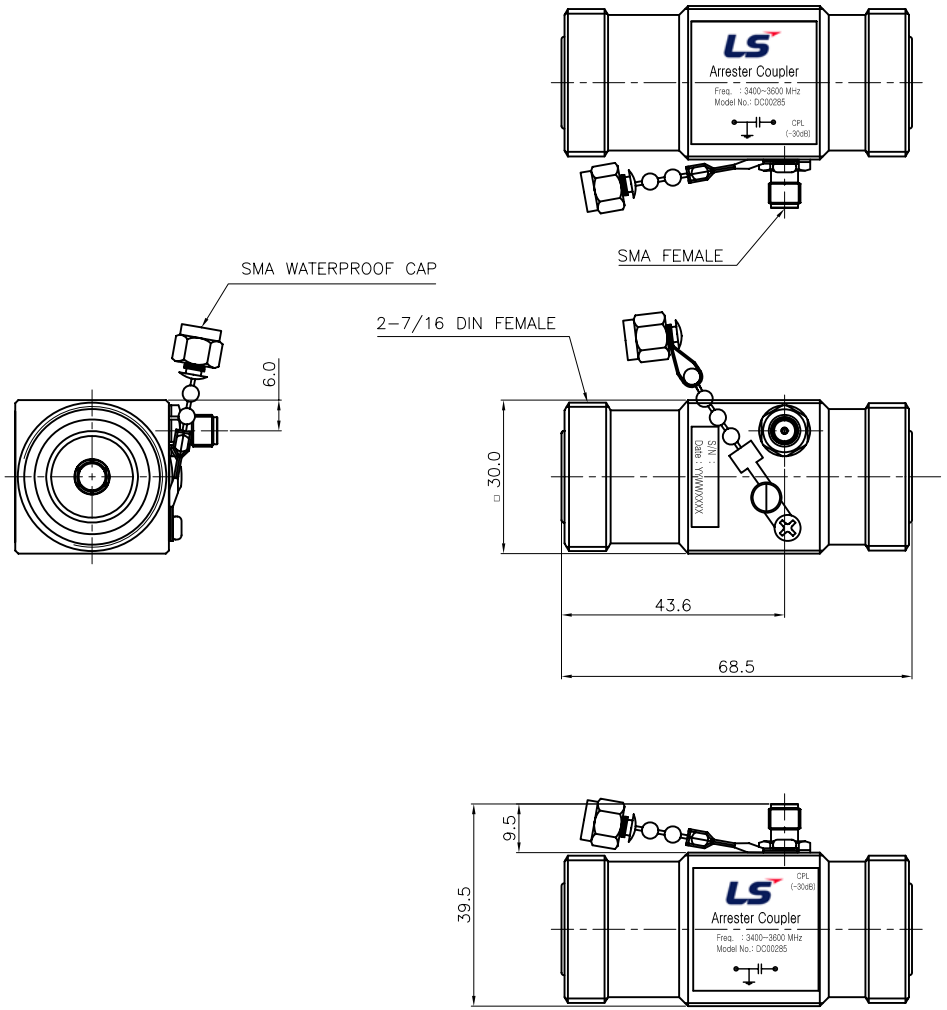

* ELECTRICAL SPECIFICATIONS
Frequency Range : 3400~3600 MHz
Impedance : 50.0Ω
Insertion Loss(Max.) : -0.15dB
(7/16 Din Female-7/16 Din Female)
Return Loss(Max.): -20dB
(7/16 Din Female, 7/16 Din Female, Except CPL Port)
Coupling Value : -30.0±1.0 dB
(7/16 Din Female, 7/16 Din Female - CPL)
PIMD : T.B.D @ 20W 2tone
RF Power : 500 W Peak, 250Watt Avg.
Surge Test : 6kV/3kA (1.2/50us, 8/20us)

* MECHANICAL SPECIFICATIONS
HOUSING : MBsBD
CONNECTORS PINS : Beryllium Copper
INSULATORS : TEFLON

* ENVIROMENTAL SPEC
IP-67
Salt Test : KS D 9502 : 2009,96hr
Operating Temperature Range :
-40.0℃ ~ +80.0℃ / Up to 95%

* ARRESTOR TYPE
λ/4 Type(C+Short Type)

* ETC
Label Print Color : 1 Color (BLACK)

* SERIAL NUMBER
- KYYWWXXXX
(YY : YEAR, WW: WEEK, XXXX: NUMBER)

TOLERANCE	Decimal ±0.3	DATE 2015. 05. 27.	KJ COMTECH KJ COMTECH CO.,LTD.	RF & MICROWAVE TECHNOLOGY Tel : 82-32-347-8015 Fax : 82-32-347-8017
	Angle ±1°	APPROVED BY J.H.YOUN		
MATERIAL MBsBD(C3604BD-F)		CHECKED BY S.L.SON	TITLE 30dB Single Coupler + Arrester	
		DRAWN BY T.J.KIM	A3	DWG NO. DC00285-7/1
FINISH SUCO Plate		SCALE 1/1 UNIT mm		REVISION 1 SHEET 1 of 1