REVISION				
REV	DESCRIPTION	DRAWN	APPR	DATE
IR	Initial Registration	K.I.CHO	J.H.YOUN	2010.09.28.

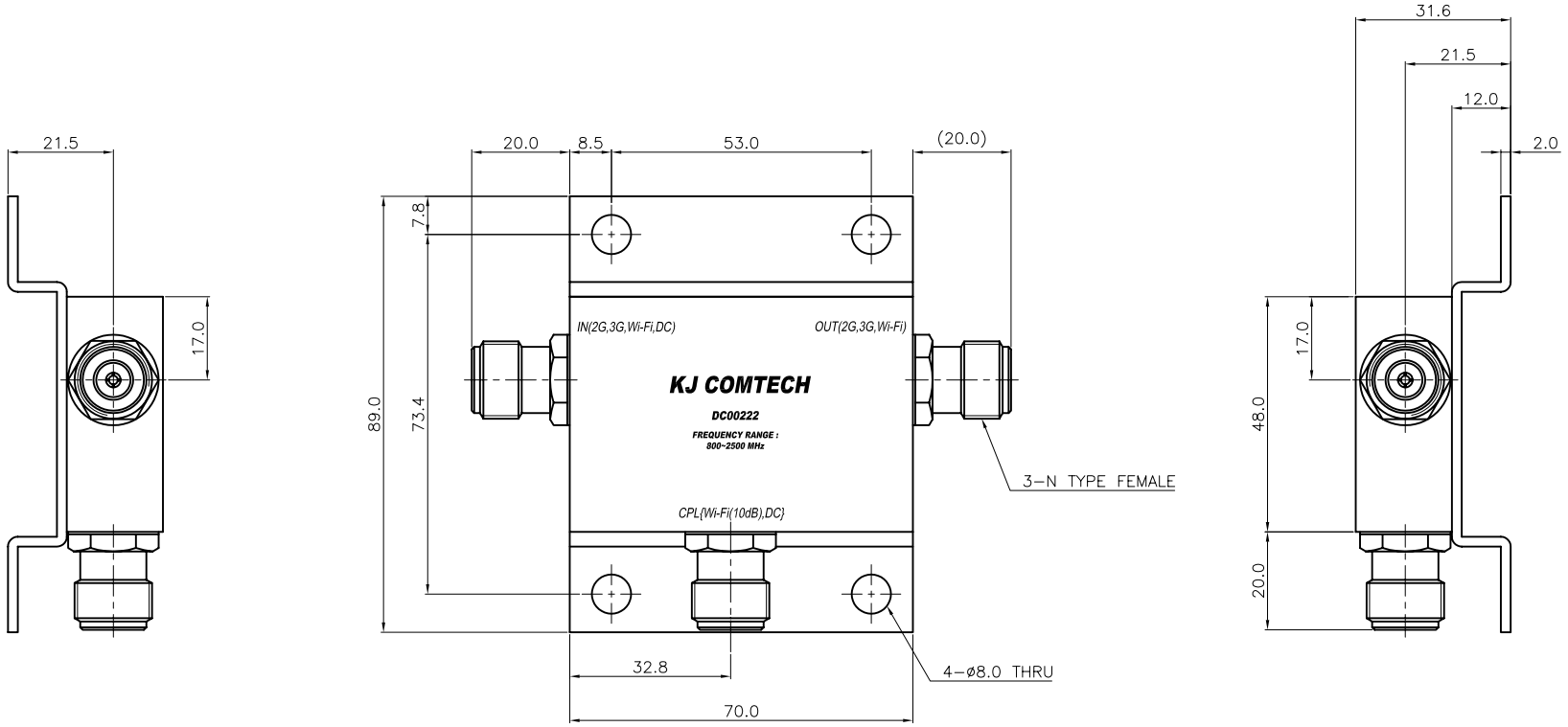

* ELECTRICAL SPECIFICATIONS
Frequency Range : 824~894MHz, 1885~2170 MHz, 2400~2500MHz
Coupling Value : 10 ± 1.0 dB (2400~2500MHz)
Insertion Loss (Max.) : 1.0dB(2G,3G,Wi-Fi)
V.S.W.R (Max.) IN,OUT PORT : 1.3 : 1 (2G,3G,Wi-Fi)
CPL PORT : 1.3 : 1 (Wi-Fi)
Directivity(Min) : 23.0dB(2400~2500MHz)
Input Power (Max.) : 30.0W
Input DC Voltage(Max.) : 48.0V
Input DC Current(Max.) : 3.0A
Impedance : 50.0Ω

* MECHANICAL SPECIFICATIONS
HOUSING : A6061 (White Chromate)
CONNECTORS : MBsBD (SUCO Plate)
CONNECTORS PINS : Beryllium Copper (Silver Plate)
INSULATORS : TEFLON

* ENVIRONMENTAL SPECIFICATIONS
IP 65

* OTHER SPECIFICATIONS
MARKING COLOR : BLACK

TOLERANCE	Decimal ±0.3	DATE 2010. 9. 28.	KJ COMTECH KJ COMTECH CO.,LTD.	RF & MICROWAVE TECHNOLOGY Tel : 82-32-347-8015 Fax : 82-32-347-8017
	Angle ±1°	APPROVED BY J.H.YOUN	TITLE 10dB Directional Coupler+Bias Tee	
MATERIAL A6061		CHECKED BY		
		DRAWN BY K.I.CHO	A3	DWG NO. DC00222-7/1
FINISH White Chromate		SCALE 1/1 UNIT mm		REVISION I R SHEET 1 of 1