REVISION		
REV	DESCRIPTION	DATE
IR	최초 개정	2006.11.16.

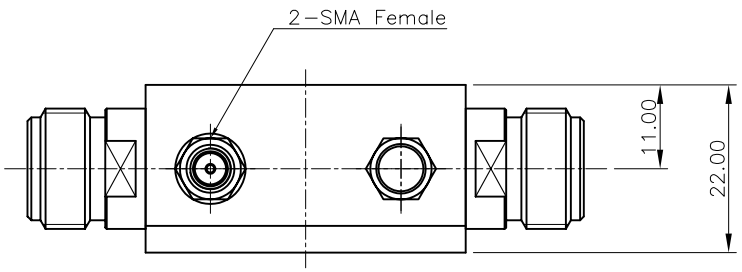

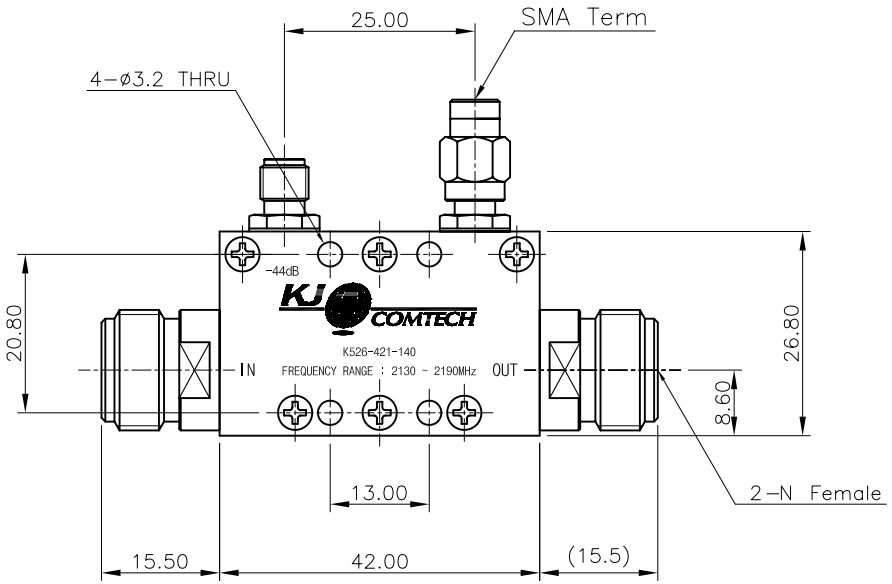

* ELECTRICAL SPECIFICATIONS
Frequency Range : 2130.0 ~ 2190.0MHz
Coupling Value : 44dB±0.5dB
Insertion Loss (Max.) : 0.2dB
V.S.W.R (Max.) : 1.22 : 1
Directivity (Min.) : 20.0dB
Impedance : 50Ω

* MECHANICAL SPECIFICATIONS
HOUSING : A6061 T6 (Yellow Chromate)
CONNECTORS : MBsBD (Nickel Plate)
CONNECTORS PINS : Beryllium Copper (Gold Plate)
INSULATORS : TEFLON

TOLERANCE	Decimal ±0.3	DATE 2006. 11. 16.		KJ COMTECH CO.,LTD. RF & MICROWAVE TECHNOLOGY Tel : 82-32-347-8015 Fax : 82-32-347-8017
	Angle ±1°	APPROVED BY	S.W.LEE	TITLE 44dB Directional Coupler
MATERIAL A6061 T6		CHECKED BY	J.H.YOUN	
		DRAWN BY	K.I.CHO	A4 DWG NO. DC00147-7/1
FINISH Yellow Chromate		SCALE 1/1	UNIT mm	REVISION I R SHEET 1 of 1