REVISION		
REV	DESCRIPTION	DATE

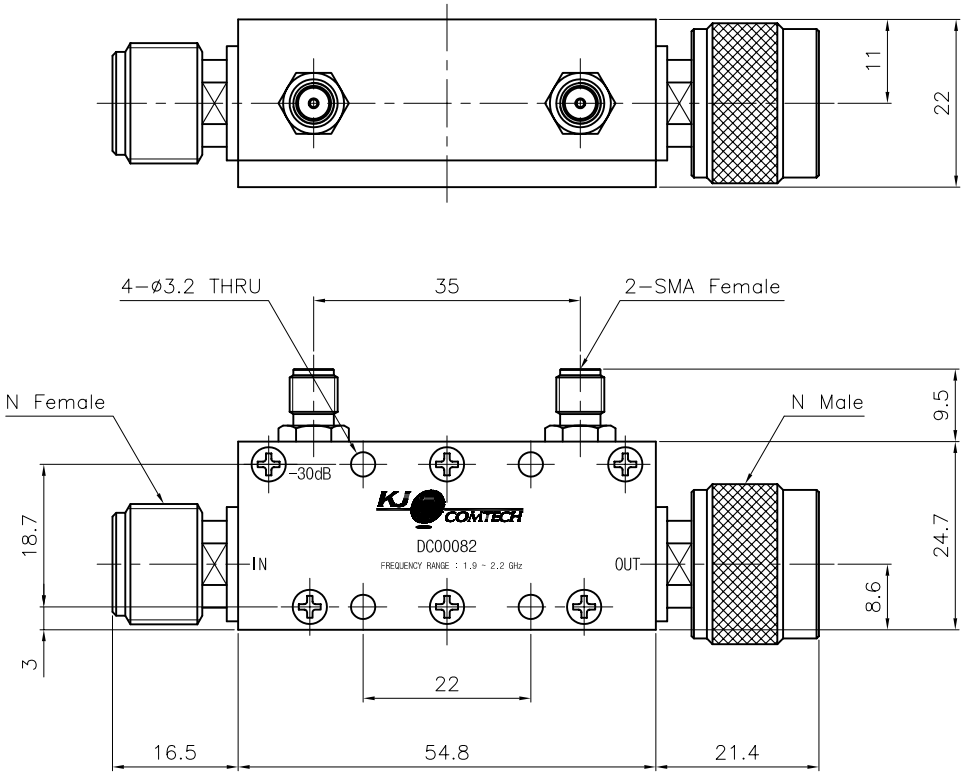

* ELECTRICAL SPECIFICATIONS
Frequency Range : 1900.0 ~ 2200.0MHz
Coupling Value : 30dB±0.5dB
Insertion Loss (Max.) : 0.2dB
V.S.W.R (Max.) : 1.2 : 1
Directivity (Min.) : 20.0dB
Power Handling (Max.) : 100.0W
Impedance : 50Ω

* MECHANICAL SPECIFICATIONS
HOUSING : A6061 T6 (Yellow Chromate)
CONNECTORS : MBsBD (Nickel Plate)
CONNECTORS PINS : Beryllium Copper (Gold Plate)
INSULATORS : TEFLON

REVISION I R		NO.	DESCRIPTION	Q'TY	MATERIAL	PLATING	REMARKS
TOLERANCE	Decimal ± 0.3	DATE	2002. 5. 16.	KJ COMTECH CO.,LTD.		RF & MICROWAVE TECHNOLOGY Tel : 82-32-347-8015 Fax : 82-32-347-8017	
	Angle ± 1°	APPROVED BY					
		CHECKED BY		TITLE	30dB Directional Coupler		
MATERIAL	A6061 T6	DRAWN BY					
FINISH	Yellow Chromate	SCALE	1/1	UNIT mm	A4	DWG NO. DC00082-7/1	
						SHEET 1 OF 1	