REVISION				
REV	DESCRIPTION	DRAWN	APPR	DATE
IR	Initial Registration	S.H.KIM		2022.01.04.

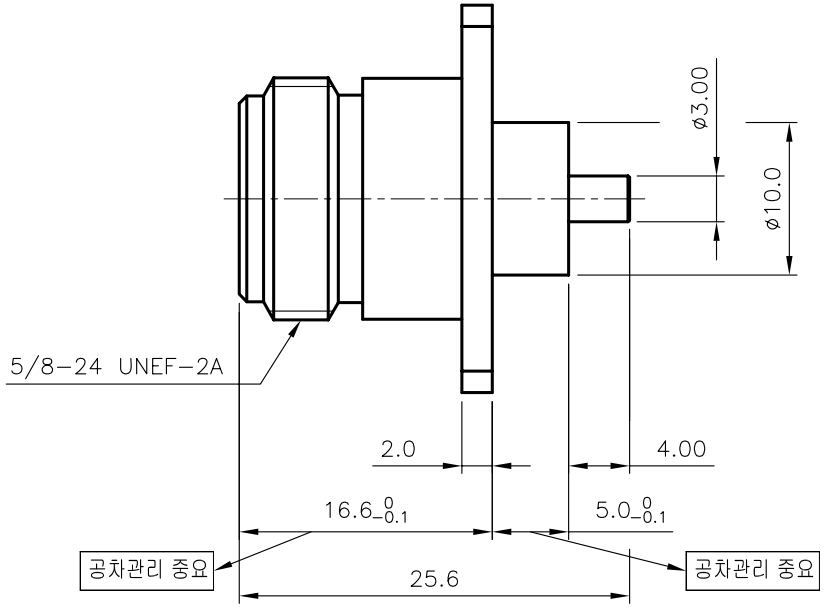

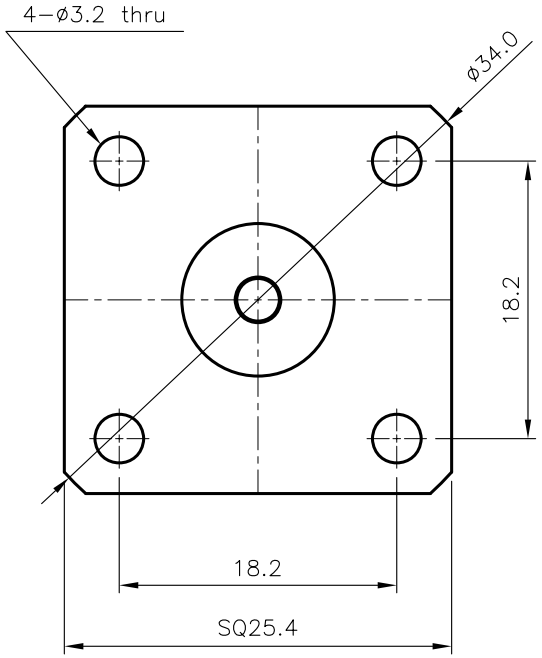

NO.	DESCRIPTION	Q'TY	MATERIAL	PLATING	CODE
3	INSULATOR	1	TEFLON		DIN02394-N/1
2	CONTACT	1	BeCu C17300	Gold Plate (1.27㎛)	DCT04277-5/1
1	BODY	1	MBsBD C3604BD-F	Nickel Plate	DBD04794-5/1

TOLERANCE	Decimal ±0.2	DATE	2022. 12. 04.
	Angle ±1°	APPROVED BY	
		CHECKED BY	
MATERIAL		DRAWN BY	S.H.KIM
FINISH		SCALE 2/1	UNIT mm

KJ COMTECH
KJ COMTECH CO.,LTD.
RF & MICROWAVE TECHNOLOGY
Tel : 82-32-347-8015
Fax : 82-32-347-8017

TITLE
N50 SOLDER END JS-4H

A4

DWG NO. CN04024-7/3

REVISION I R

SHEET 1 of 1