REVISION				
REV	DESCRIPTION	DRAWN	APPR	DATE
IR	Initial Registration	S.Y.EUN	I.C.KIM	2021. 07. 06.
1	[설변No.202107-0009] 절연체 구성오류로 인한 코드 변경 및 GASKET 이탈개선으로 인한 바디 치수 변경	S.Y.EUN	I.C.KIM	2021. 07. 28.

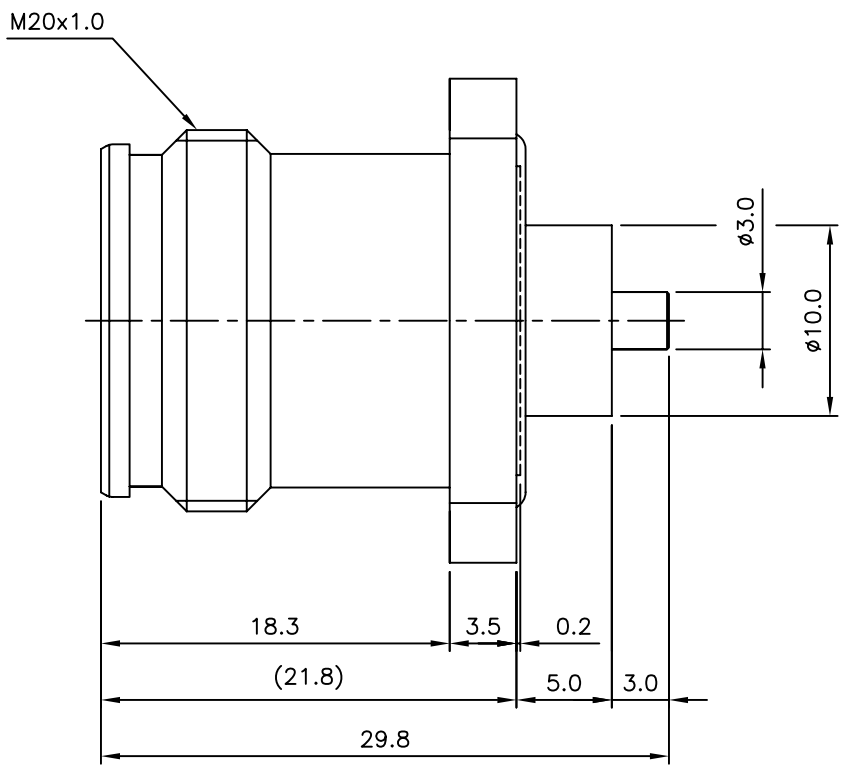

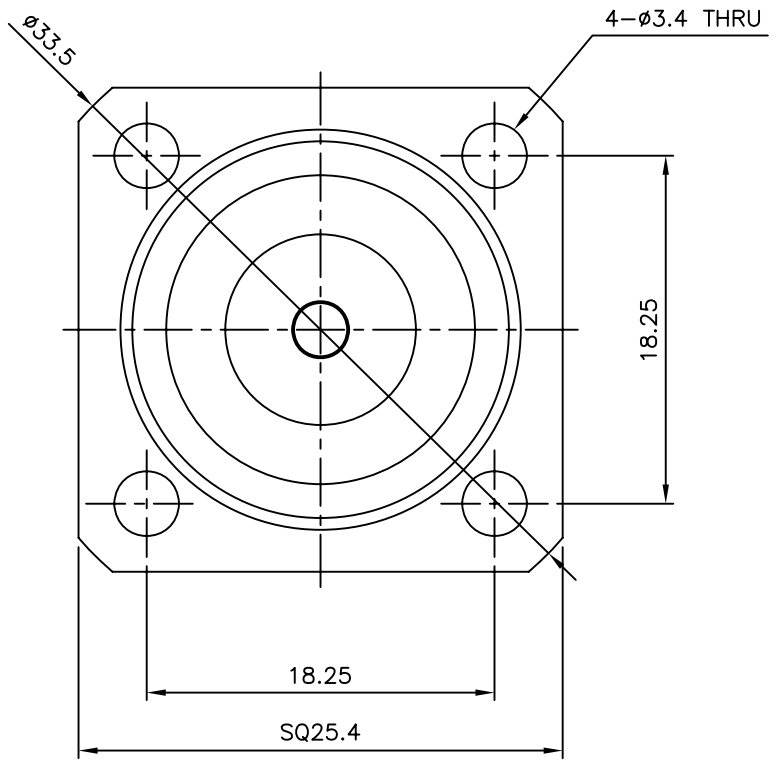

	NO.	DESCRIPTION	Q'TY	MATERIAL	PLATING	CODE
	5	JACK	1	MBsBD C3604BD-F	Silver Plate (3㎛)	DJA00228-5/6
1	4	INSULATOR	1	TEFLON		DIN02393-N/1 ~~DIN03212-N/2~~
	3	GASKET	1	SILICONE RUB		DGK00179-N/1
	2	CONTACT	1	BeCu C17300	Silver Plate (3㎛)	DCT04205-5/2
1	1	BODY	1	MBsBD C3604BD-F	SUCO Plate	DBD04715-5/1

ELECTRICAL DATA

1	Frequency range	DC ~ 6.0 GHz
2	IMPEDANCE	50Ω NOMINAL
3	V.S.W.R	1.2 : 1 max
4	Insertion Loss	-0.2dB min
5	PIMD	160dBc (Min) (20W*2Tone)

TOLERANCE	Decimal ±0.2	DATE	2021. 07. 28.
	Angle ±1°	APPROVED BY	I.C.KIM
		CHECKED BY	
MATERIAL		DRAWN BY	S.Y.EUN
FINISH		SCALE 2.5/1	UNIT mm

KJ COMTECH
KJ COMTECH CO.,LTD.
RF & MICROWAVE TECHNOLOGY
Tel : 82-32-347-8015
Fax : 82-32-347-8017

TITLE
4.3-10 SOLDER END JS-4H

A4 | DWG NO. CN03984-7/2 | REVISION 1 | SHEET 1 of 1