REVISION				
REV	DESCRIPTION	DRAWN	APPR	DATE
IR	Initial Registration	I.C.KIM		2014.08.19.
1	[설변No.202012-0002] O-RING 빠짐 개선 안착부 금형수정	I.C.KIM		2020.12.07.
2	[설변No.202101-0003] O-RING 빠짐 개선 안착부 0.1mm Ground Boss 추가	S.Y.EUN	I.C.KIM	2021.01.20.

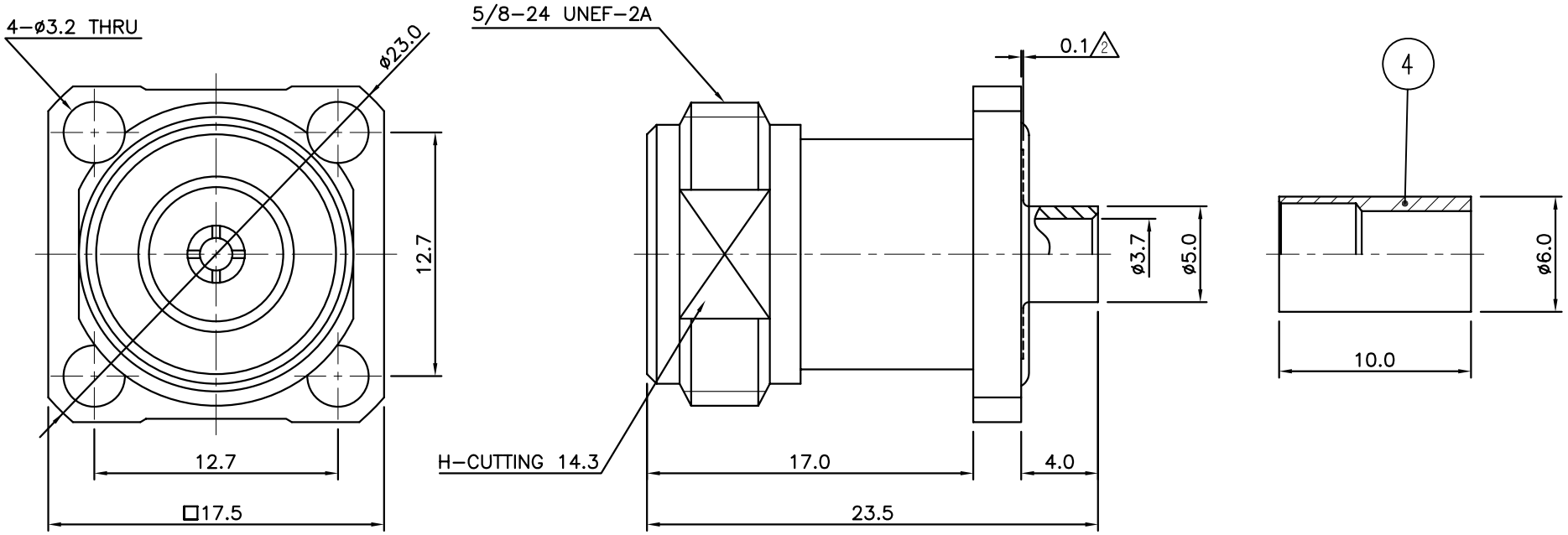

	NO.	DESCRIPTION	Q'TY	MATERIAL	PLATING	CODE
	6	INSULATOR	1	MBsBD C3604BD-F		DIN01966-N/1
1	5	GASKET	1	SILICONE Rub ~~NBR~~		DGK00257-N/2 ~~DGK00257-N/1~~
	4	FERRULE	1	MBsBD C3604BD-F	Nickel Plate	DFE00162-5/1
	3	CONTACT	1	BeCu C17300	Gold Plate	DCT02526-5/1
2 1	2	BODY	1	MBsBD C3604BD-F	Nickel Plate	DBD02997-5/2 ~~DBD02997-5/1~~
1	1	BODY	1	ZnDC	Nickel Plate (3~4㎛)	DBD02992-5/3 ~~DBD02992-5/1~~

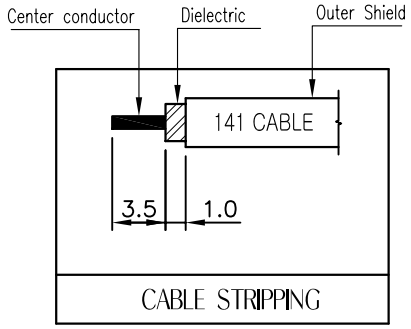

TOLERANCE	Decimal ±0.2	DATE	2021. 01. 20.
	Angle ±1°	APPROVED BY	I.C.KIM
		CHECKED BY	
MATERIAL		DRAWN BY	S.Y.EUN
FINISH		SCALE 3/1	UNIT mm

KJ COMTECH
KJ COMTECH CO.,LTD.
RF & MICROWAVE TECHNOLOGY
Tel : 82-32-347-8015
Fax : 82-32-347-8017

TITLE: N50 CABLE JS-4H MF141

A4 | DWG NO. CN03960-7/2 | REVISION 2 | SHEET 1 of 1