REVISION

REV	DESCRIPTION	DRAWN	APPR	DATE
IR	Initial Registration	I.C.KIM	J.H.YOUN	2012.01.03.
1	[설변처리No.201301-0001] 특성개선 PIN,절연체 구조 변경	I.C.KIM	I.C.KIM	2013.01.02.
2	[설변No.201401-0007]신뢰성 향상(가스켓 변경)	M.H.SONG	I.C.KIM	2014.01.16.
3	[설변No.201810-0005] 회전 방지로 인한 PIN 널링 추가	S.Y.EUN	I.C.KIM	2018.10.12.
4	GASKET 변경 (NBR → SILICONE)	S.Y.EUN	I.C.KIM	2018.10.16.
5	[설변No.202012-0002] O-RING 빠짐 개선 안착부 금형수정	I.C.KIM		2020.12.07.
6	[설변No.202101-0003] O-RING 빠짐 개선 안착부 0.1mm Ground Boss 추가	S.Y.EUN	I.C.KIM	2021.01.20.

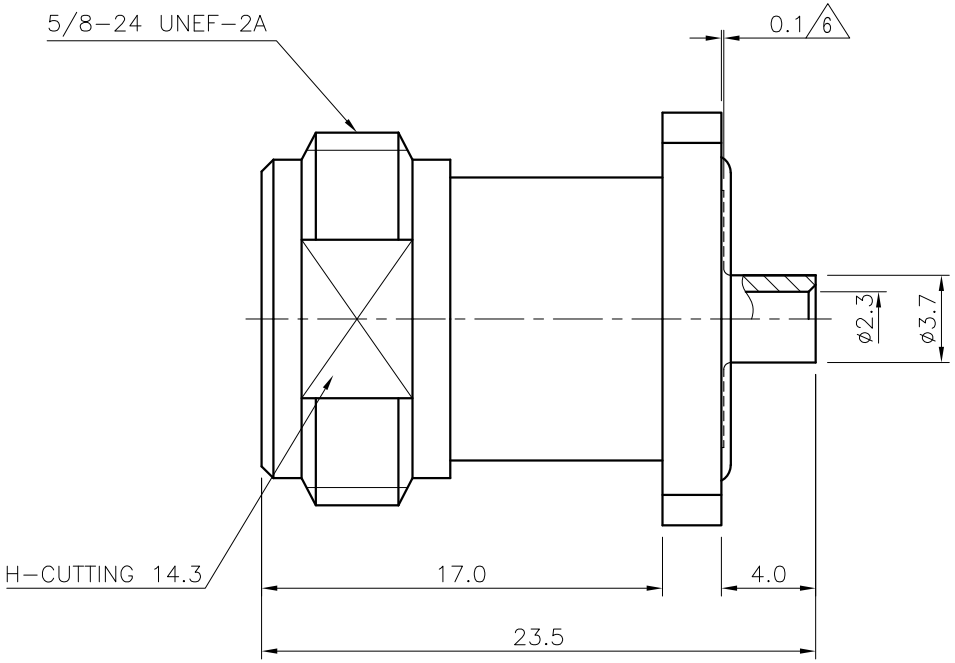

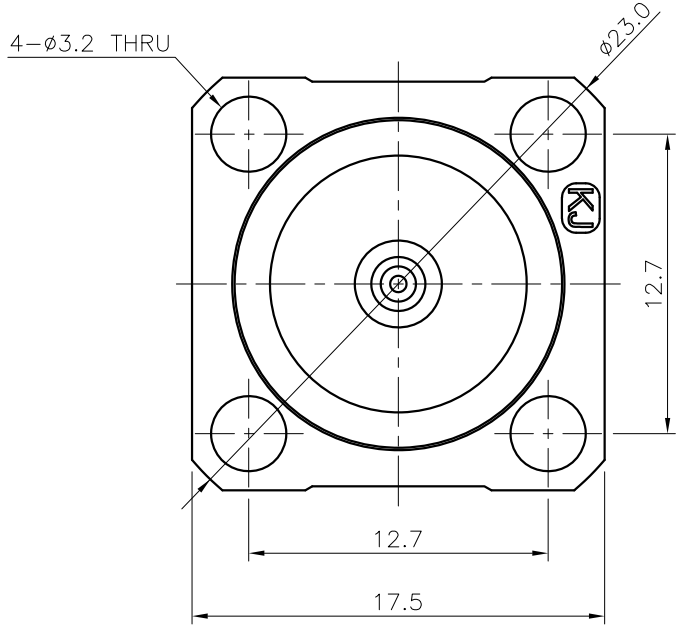

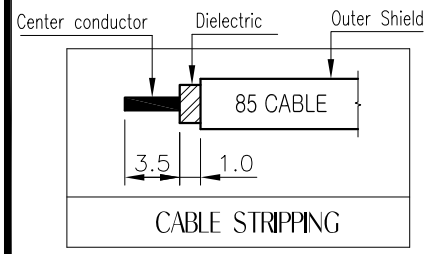

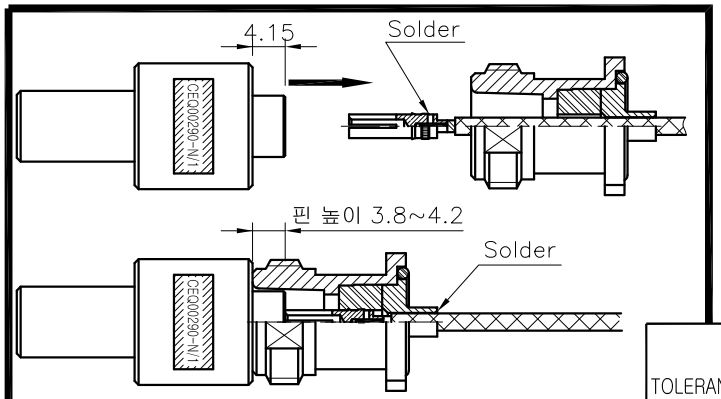

■ ASSEMBLY 조립순서
1. 케이블 심선+핀 납땜하고 프레스를 사용하여 핀 높이 JIG로 누른다.
2. 핀 조립후 케이블+바디 납땜 작업한다.

	NO.	DESCRIPTION	Q'TY	MATERIAL	PLATING	CODE
1	5	INSULATOR	1	TEFLON		DIN01966-N/1 ~~DIN01984-N/1~~
4 2	4	GASKET	1	SILICONE Rub ~~NBR~~ ~~SILICONE Rub~~		DGK00257-N/2 ~~DGK00257-N/1~~ ~~DGK00032-N/1~~
3 1	3	CONTACT	1	BeCu C17300	Gold Plate	DCT02735-5/3 ~~DCT02735-5/1~~ ~~DCT02525-5/1~~
6 5	2	BODY	1	MBsBD C3604BD-F	Nickel Plate	DBD02996-5/5 ~~DBD02996-5/1~~
5	1	BODY	1	ZnDC	Nickel Plate (3~4㎛)	DBD02992-5/3 ~~DBD02992-5/1~~

TOLERANCE	Decimal ±0.2	DATE 2021. 01. 20.	
	Angle ±1°	APPROVED BY I.C.KIM	
MATERIAL		CHECKED BY	
		DRAWN BY S.Y.EUN	
FINISH		SCALE 3/1	UNIT mm

KJ COMTECH
KJ COMTECH CO.,LTD.
RF & MICROWAVE TECHNOLOGY
Tel : 82-32-347-8015
Fax : 82-32-347-8017

TITLE
N50 CABLE JS-4H 85

A4 | DWG NO. CN03959-7/1 | REVISION 6 | SHEET 1 of 1