REVISION				
REV	DESCRIPTION	DRAWN	APPR	DATE
IR	Initial Registration	S.Y.EUN	I.C.KIM	2021.03.18.

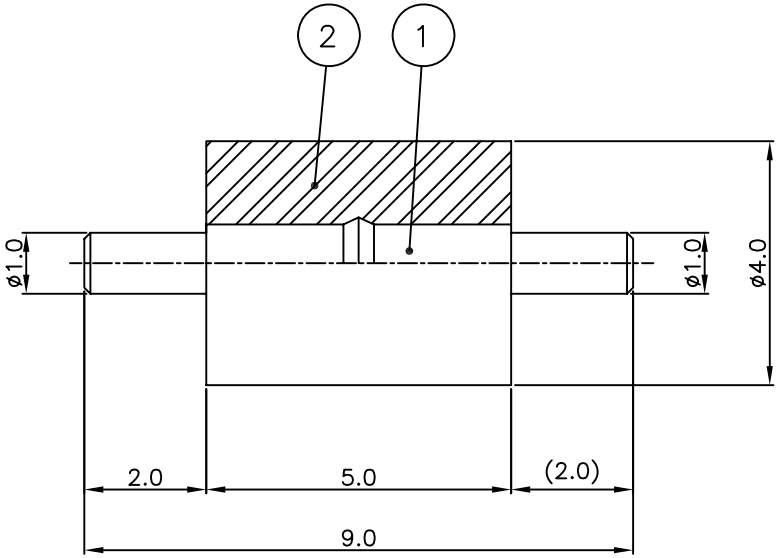

NO.	DESCRIPTION	Q'TY	MATERIAL	PLATING	CODE
2	INSULATOR	1	TEFLON		DIN03110-N/3
1	CONTACT	1	MBsBD C3604BD-F	Gold Plate	DCT04001-5/1

TOLERANCE	Decimal ±0.2	DATE	2021. 03. 18.
	Angle ±1°	APPROVED BY	I.C.KIM
		CHECKED BY	
MATERIAL		DRAWN BY	S.Y.EUN
FINISH		SCALE 8/1	UNIT mm

KJ COMTECH
KJ COMTECH CO.,LTD.
RF & MICROWAVE TECHNOLOGY
Tel : 82-32-347-8015
Fax : 82-32-347-8017

TITLE: BUSHING SOLDER END

A4

DWG NO. CN03918-7/2

REVISION I R

SHEET 1 of 1