REVISION				
REV	DESCRIPTION	DRAWN	APPR	DATE
IR	Initial Registration	I.C.KIM		2019.12.31.

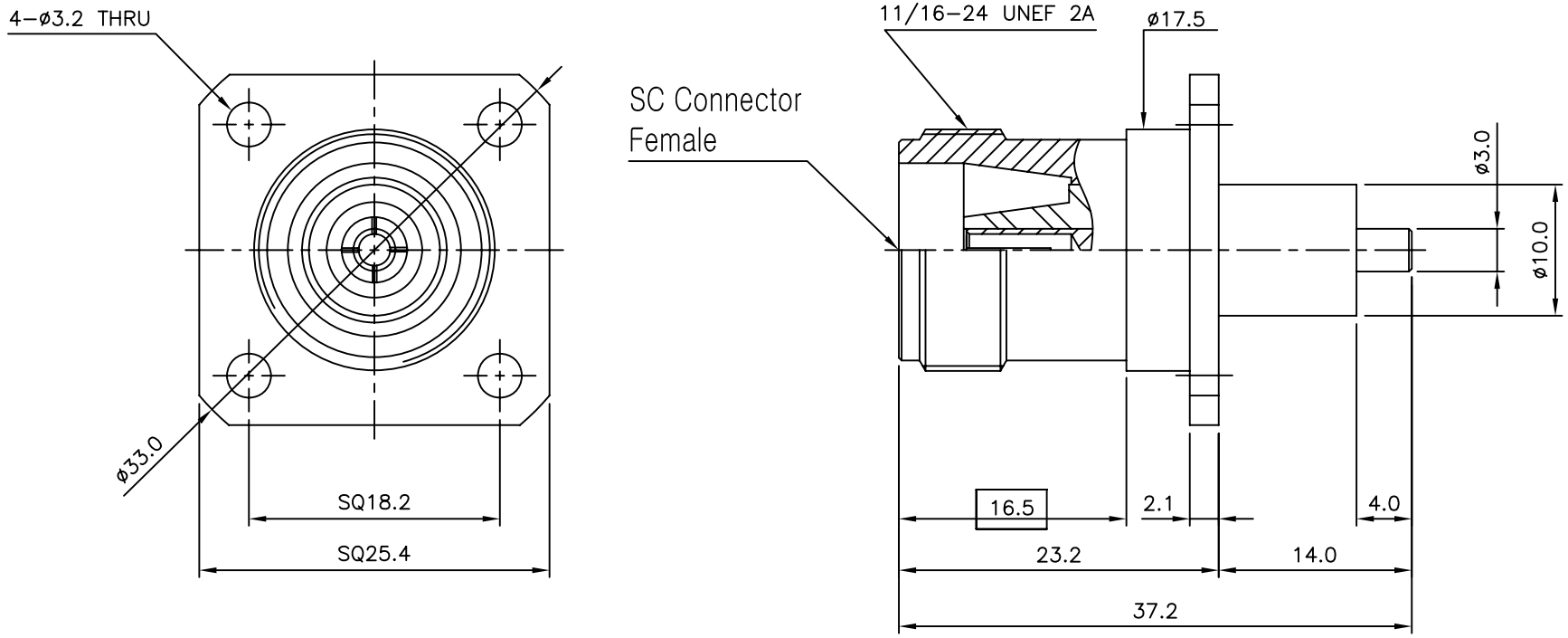

Notes

1. RoHS & Pb-FREE
2. CONNECTOR MATERIAL & FINISHES
   2-1. SC JS-4H ▶▷ BODY : BRASS(C3604BD-F) / Nickel Plating
   CONTACT : Beryllium copper(C17300) / Gold Plating
   INSULATOR : PTFE

NO.	DESCRIPTION	Q'TY	MATERIAL	PLATING	CODE

TOLERANCE	Decimal ±0.2	DATE	2019. 12. 31.
	Angle ±1°	APPROVED BY	
		CHECKED BY	
MATERIAL		DRAWN BY	I.C.KIM
FINISH		SCALE 2/1	UNIT mm

KJ COMTECH
KJ COMTECH CO.,LTD.
RF & MICROWAVE TECHNOLOGY
Tel : 82-32-347-8015
Fax : 82-32-347-8017

TITLE: SC50 SOLDER END JS-4H

A4

DWG NO. CN03901-7/1

REVISION I R

SHEET 1 of 1