REVISION				
REV	DESCRIPTION	DRAWN	APPR	DATE
IR	Initial Registration	S.Y.EUN	I.C.KIM	2019.09.24.
1	고객사 요청사항으로 인한 치수 변경	S.Y.EUN	I.C.KIM	2020.01.03.
2	절연체 공용화로 인한 코드 변경	S.Y.EUN	I.C.KIM	2020.12.24.

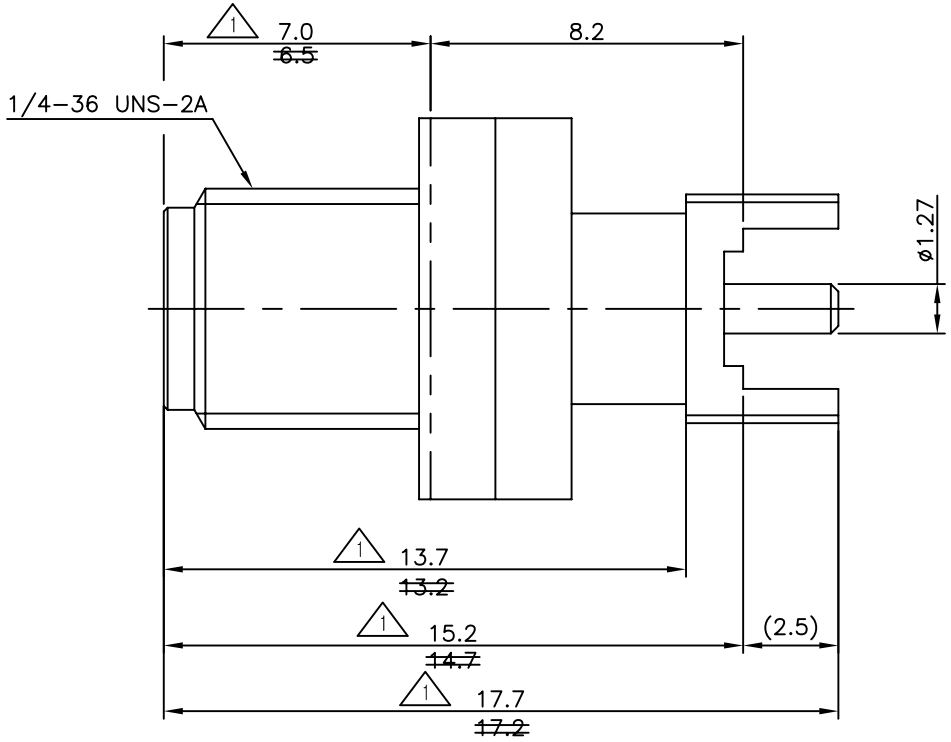

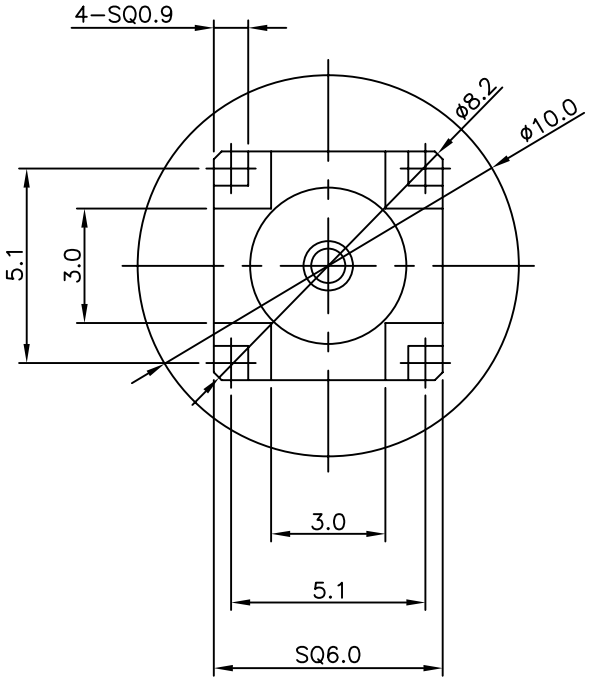

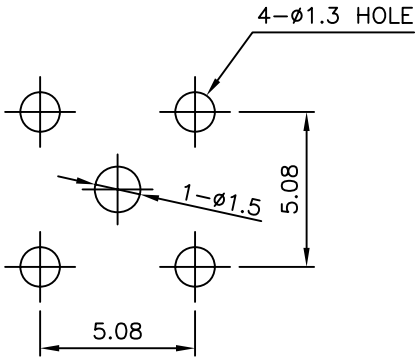

MOUNTING HOLE

NO.	DESCRIPTION	Q'TY	MATERIAL	PLATING	CODE
4	EMI GASKET	1	Carbon	BLACK	DGK00324-N/1
3	INSULATOR	1	TEFLON		DIN02077-N/1 ~~DIN00121-N/1~~ ~~DIN00123-N/1~~
2	CONTACT	1	BeCu C17300	Gold Plate	DCT02892-5/2 ~~DCT02892-5/1~~
1	BODY	1	MBsBD C3604BD-F	Nickel Plate	DBD04546-5/2 ~~DBD04546-5/1~~

TOLERANCE	Decimal ±0.1	DATE	2020. 12. 24.
	Angle ±1°	APPROVED BY	I.C.KIM
		CHECKED BY	
MATERIAL		DRAWN BY	S.Y.EUN
FINISH		SCALE 5/1	UNIT mm

KJ COMTECH
KJ COMTECH CO.,LTD.
RF & MICROWAVE TECHNOLOGY
Tel : 82-32-347-8015
Fax : 82-32-347-8017

TITLE: SMA50 PCB JB-4R

A4 | DWG NO. CN03875-7/1 | REVISION 2 | SHEET 1 of 1