REVISION				
REV	DESCRIPTION	DRAWN	APPR	DATE
IR	Initial Registration	S.Y.EUN	I.C.KIM	2019.07.16.

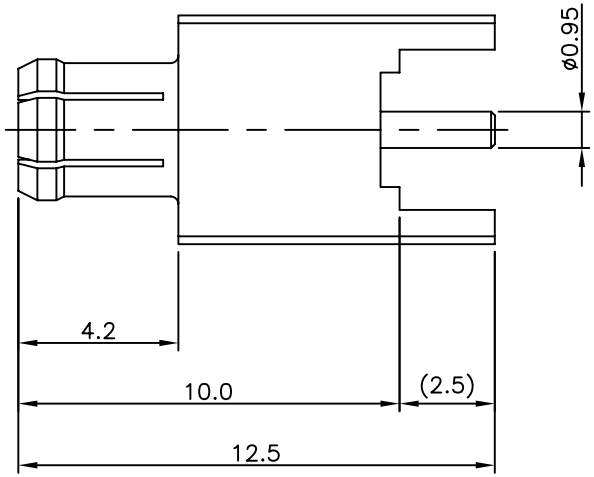

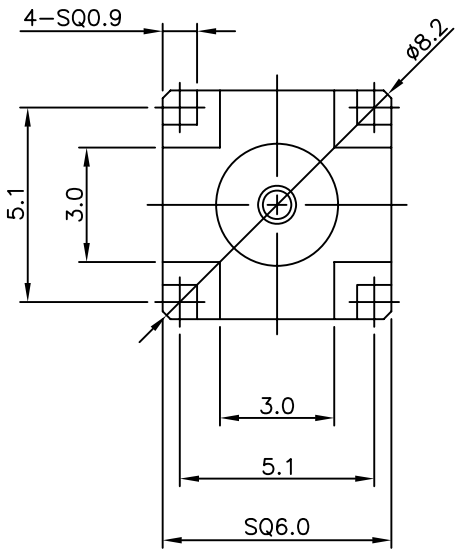

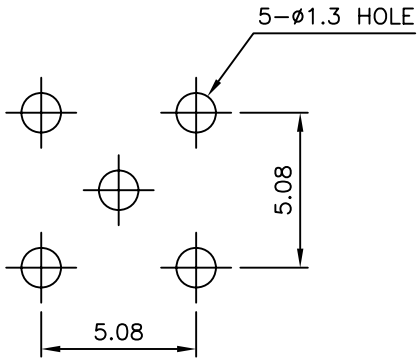

MOUNTING HOLE

NO.	DESCRIPTION	Q'TY	MATERIAL	PLATING	CODE
3	INSULATOR	1	TEFLON		DIN03058-N/2
2	CONTACT	1	MBsBD C3604BD-F	Gold Plate	DCT04028-5/2
1	BODY	1	MBsBD C3604BD-F	Nickel Plate	DBD04512-5/1

TOLERANCE	Decimal ±0.1	DATE	2019. 07. 16.
	Angle ±1°	APPROVED BY	I.C.KIM
		CHECKED BY	
MATERIAL		DRAWN BY	S.Y.EUN
FINISH		SCALE 5/1	UNIT mm

KJ COMTECH
KJ COMTECH CO.,LTD.
RF & MICROWAVE TECHNOLOGY
Tel : 82-32-347-8015
Fax : 82-32-347-8017

TITLE
MCXA50 PCB PS-4R

A4

DWG NO. CN03850-7/1

REVISION I R

SHEET 1 of 1