| REVISION | | | | |
|---|---|---|---|---|
| REV | DESCRIPTION | DRAWN | APPR | DATE |
| IR | Initial Registration | S.Y.EUN | I.C.KIM | 2019.07.10. |

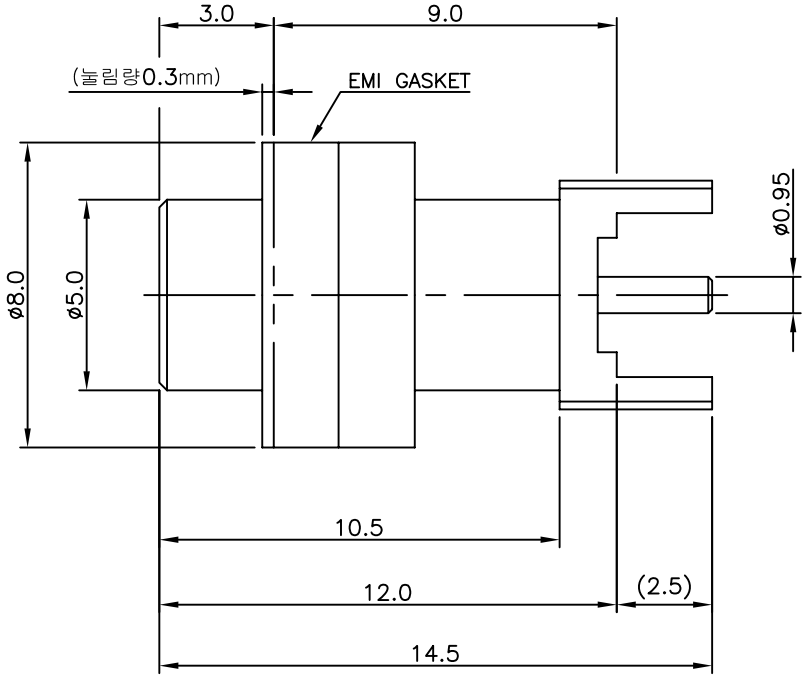


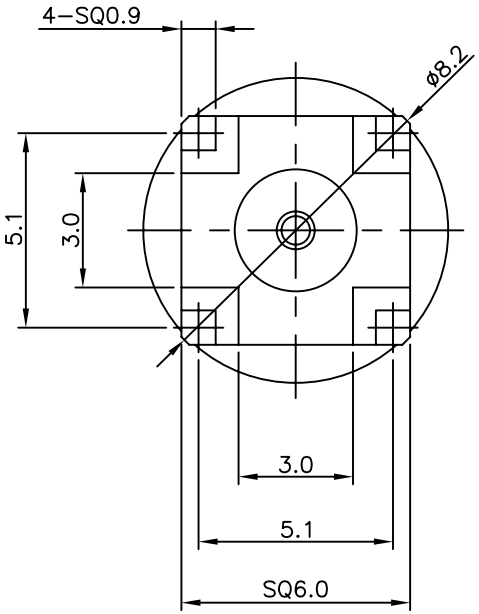


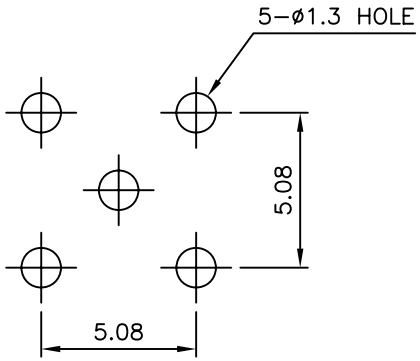


MOUNTING HOLE

| NO. | DESCRIPTION | Q'TY | MATERIAL | PLATING | CODE |
|---|---|---|---|---|---|
| 4 | EMI GASKET | 1 | Carbon | Black | DGK00251-N/1 |
| 3 | INSULATOR | 1 | TEFLON | | DIN03057-N/2 |
| 2 | CONTACT | 1 | BeCu C17300 | Gold Plate | DCT04027-5/2 |
| 1 | BODY | 1 | MBsBD C3604BD-F | Nickel Plate | DBD04508-5/2 |

| | | | |
|---|---|---|---|
| TOLERANCE | Decimal ±0.1 | DATE | 2019. 07. 10. |
| | Angle ±1° | APPROVED BY | I.C.KIM |
| | | CHECKED BY | |
| MATERIAL | | DRAWN BY | S.Y.EUN |
| FINISH | | SCALE 5/1 | UNIT mm |


KJ COMTECH
KJ COMTECH CO.,LTD.
RF & MICROWAVE TECHNOLOGY
Tel : 82-32-347-8015
Fax : 82-32-347-8017


TITLE
MCX50 PCB JS-4R

A4 DWG NO. CN03848-7/1
REVISION I R SHEET 1 of 1