REVISION				
REV	DESCRIPTION	DRAWN	APPR	DATE
IR	Initial Registration	S.Y.EUN	I.C.KIM	2019.03.12.

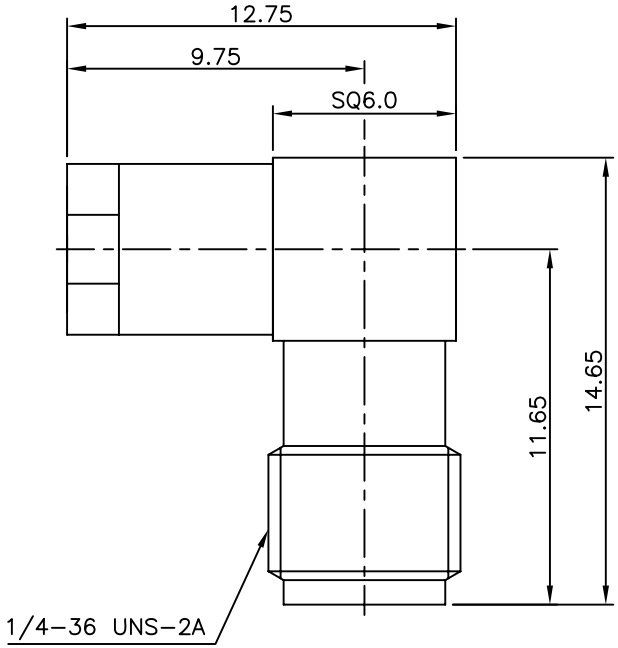

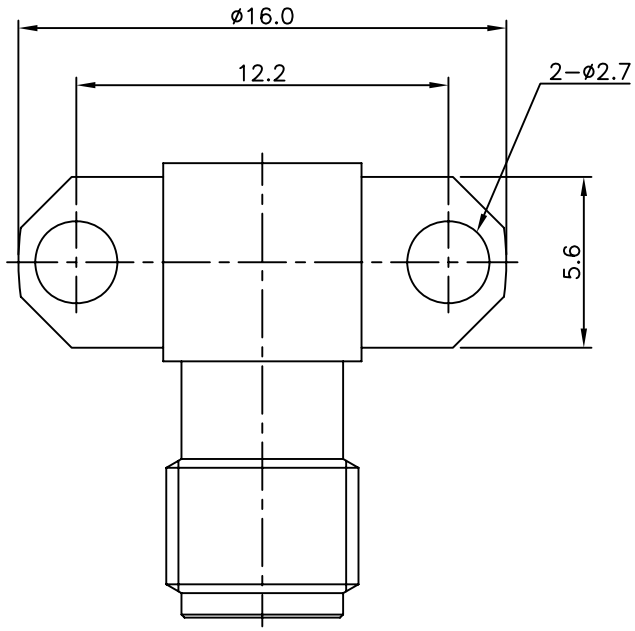

NO.	DESCRIPTION	Q'TY	MATERIAL	PLATING	CODE
8	KEY	1	MBsBD C3604BD-F	Nickel Plate	DKY00028-5/2
7	COVER	1	MBsBD C3604BD-F	Nickel Plate	DCO00023-5/2
6	INSULATOR	1	TEFLON		DIN00090-N/1
5	INSULATOR	1	TEFLON		DIN01243-N/1
4	CONTACT	1	BeCu C17300	Gold Plate	DCT04004-5/1
3	CONTACT	1	BeCu C17300	Gold Plate	DCT01464-5/1
2	BODY	1	MBsBD C3604BD-F	Nickel Plate	DBD04473-5/1
1	BODY	1	MBsBD C3604BD-F	Nickel Plate	DBD04427-5/7

TOLERANCE	Decimal ±0.2	DATE	2019. 03. 12.
	Angle ±1°	APPROVED BY	I.C.KIM
MATERIAL		CHECKED BY	
		DRAWN BY	S.Y.EUN
FINISH		SCALE 3/1	UNIT mm

KJ COMTECH
KJ COMTECH CO.,LTD.
RF & MICROWAVE TECHNOLOGY
Tel : 82-32-347-8015
Fax : 82-32-347-8017

TITLE
SMA50 SOLDER END JL-2H

A4

DWG NO. CN03820-7/2

REVISION I R

SHEET 1 of 1