REVISION				
REV	DESCRIPTION	DRAWN	APPR	DATE
IR	Initial Registration	S.Y.EUN	I.C.KIM	2018.10.26.
1	BMBC 공용화 치수 적용	S.Y.EUN	I.C.KIM	2018.11.27.

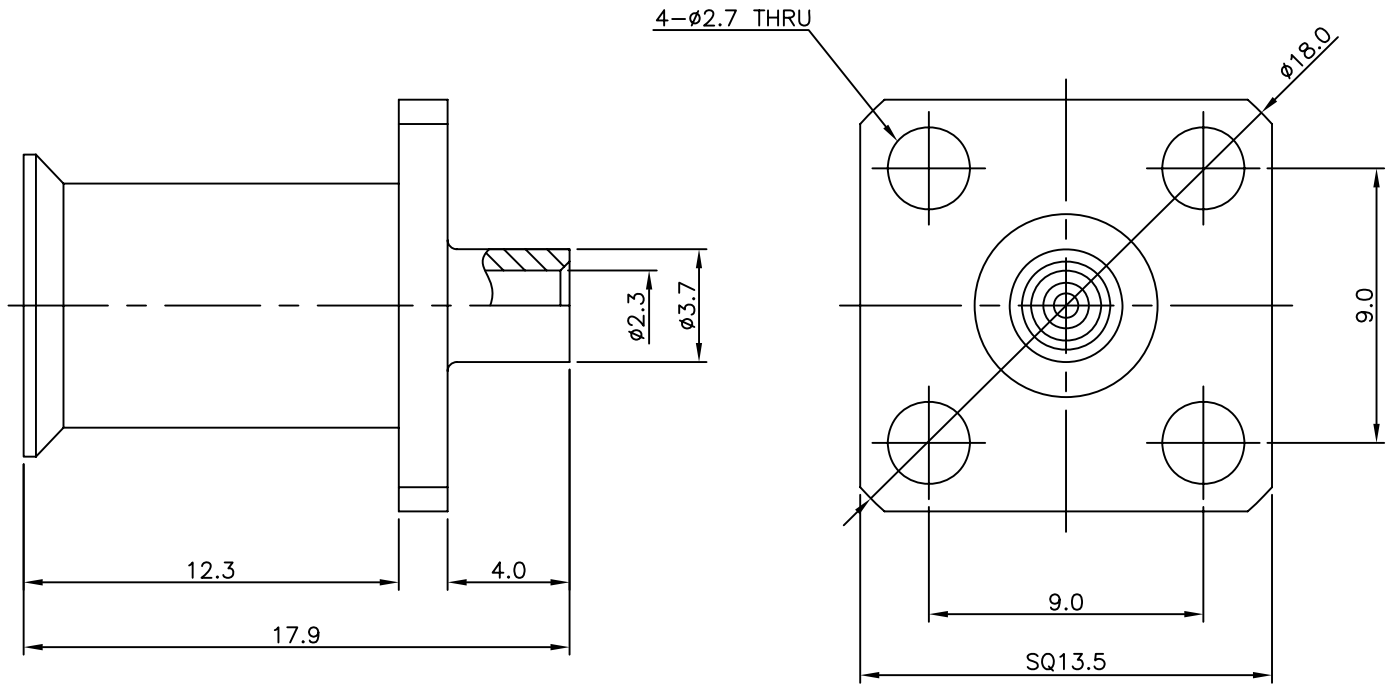

	NO.	DESCRIPTION	Q'TY	MATERIAL	PLATING	CODE
	4	INSULATOR	1	TEFLON		DIN03009-N/1
1	3	CONTACT	1	MBsBD C3604BD-F	Gold Plate	DCT03973-5/1
	2	BODY (B)	1	MBsBD C3604BD-F	Nickel Plate	DBD02996-5/2
1	1	BODY (A)	1	MBsBD C3604BD-F	Nickel Plate	DBD04436-5/1

TOLERANCE	Decimal ±0.2	DATE	2018. 11. 27.
	Angle ±1°	APPROVED BY	I.C.KIM
MATERIAL		CHECKED BY	
		DRAWN BY	S.Y.EUN
FINISH		SCALE 4/1	UNIT mm

KJ COMTECH
KJ COMTECH CO.,LTD.
RF & MICROWAVE TECHNOLOGY
Tel : 82-32-347-8015
Fax : 82-32-347-8017

TITLE
BMBC50 CABLE JS-4H 85TP

A4

DWG NO. CN03798-7/1

REVISION 1

SHEET 1 of 1