REVISION				
REV	DESCRIPTION	DRAWN	APPR	DATE
IR	Initial Registration	I.C.KIM		2018.11.06.

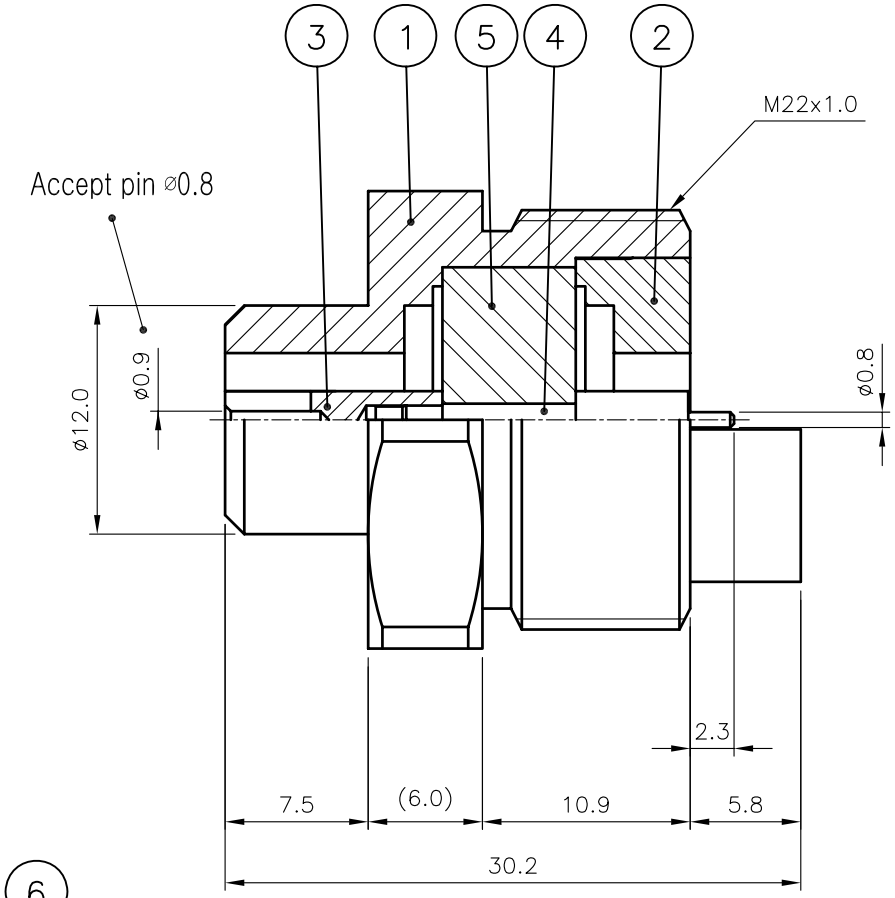

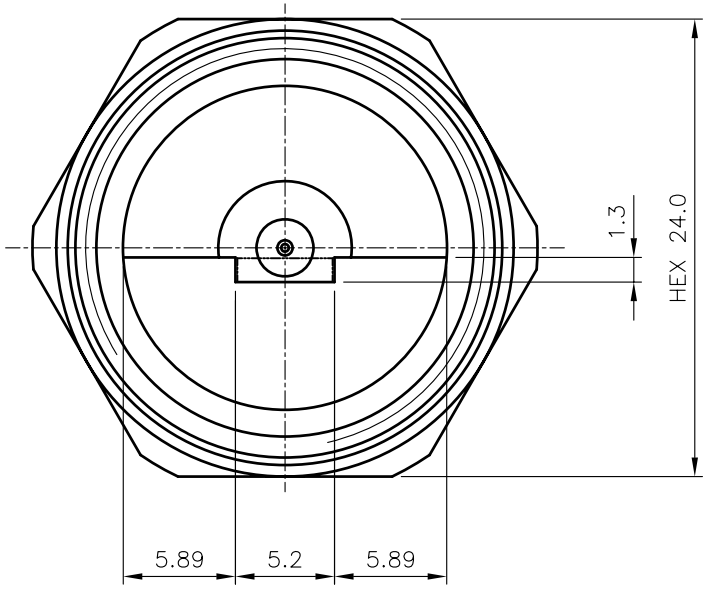

※Contact pin ③④ 조립 억지끼움 (납땜 X)

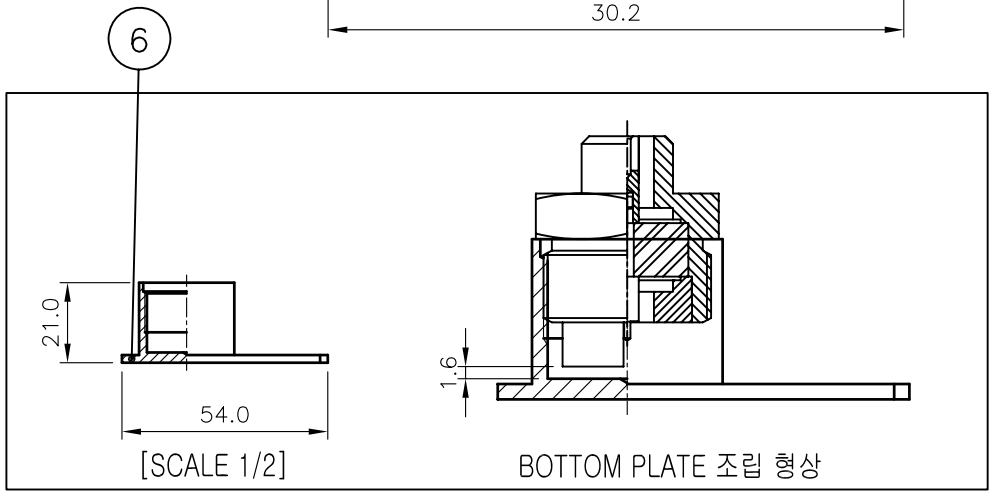

NO.	DESCRIPTION	Q'TY	MATERIAL	PLATING	CODE
6	BOTTOM PLATE	1	AL5052	무전해 Nickel (5㎛)	DBR00167-5/2
5	INSULATOR	1	CERAMIC (Er:9.7)	———	DIN03007-N/1
4	CONTACT (B)	1	MBsBD C3604BD-F	무전해 Nickel (5㎛)	DCT03965-5/1
3	CONTACT (A)	1	BeCu C17300	무전해 Nickel (5㎛)	DCT03964-5/1
2	COVER	1	MBsBD C3604BD-F	무전해 Nickel (5㎛)	DBD04424-5/1
1	BODY	1	MBsBD C3604BD-F	무전해 Nickel (5㎛)	DBD04423-5/1

TOLERANCE	Decimal ±0.2	DATE	2018. 11. 06.
	Angle ±1°	APPROVED BY	
		CHECKED BY	
MATERIAL	———	DRAWN BY	I.C.KIM
FINISH	———	SCALE 2.5/1	UNIT mm

KJ COMTECH
KJ COMTECH CO.,LTD.
RF & MICROWAVE TECHNOLOGY
Tel : 82-32-347-8015
Fax : 82-32-347-8017

TITLE High temperature connector Solder end (F/F)

A4

DWG NO. CN03772-7/2

REVISION I R

SHEET 1 of 1