Mate compatible table	
SMA [~18GHz] 3.5mm [~26.5GHz] 2.92mm(K) [~40GHz]	Mate
2.4mm [~50GHz] 1.85mm(V) [~65GHz]	Mate

Un mate

REVISION				
REV	DESCRIPTION	DRAWN	APPR	DATE
IR	Initial Registration	S.Y.EUN	I.C.KIM	2018.09.18.

ELECTRICAL DATA

1. IMPEDANCE : 50ohm
2. FREQUENCY RANGE : DC~30GHz
3. VSWR (Max) : 1.2

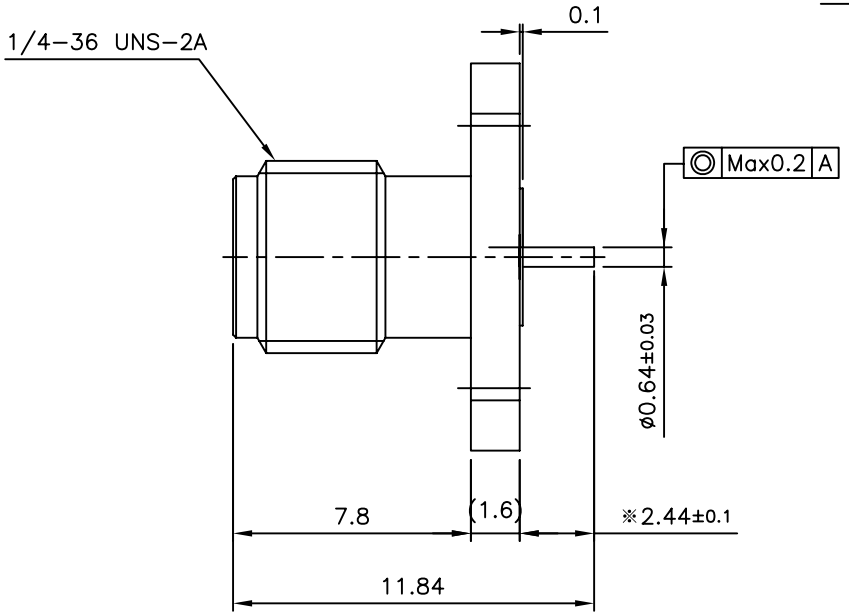

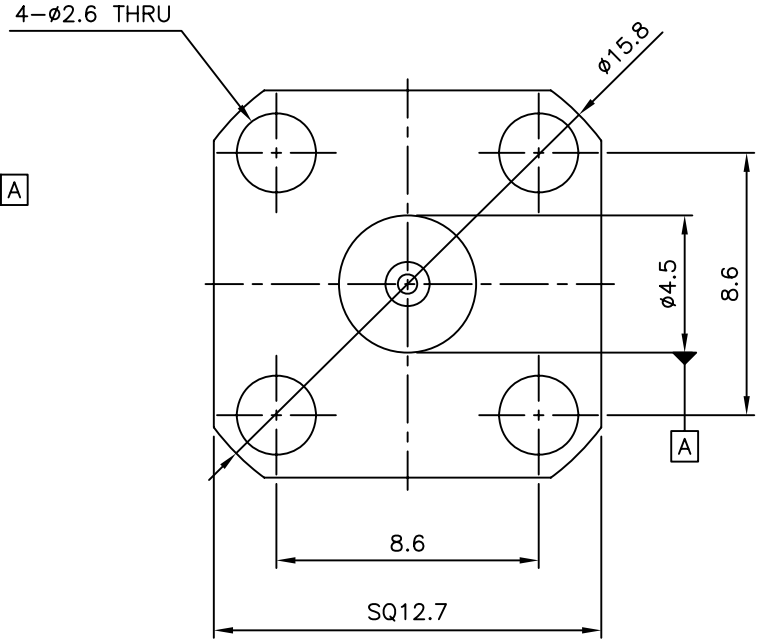

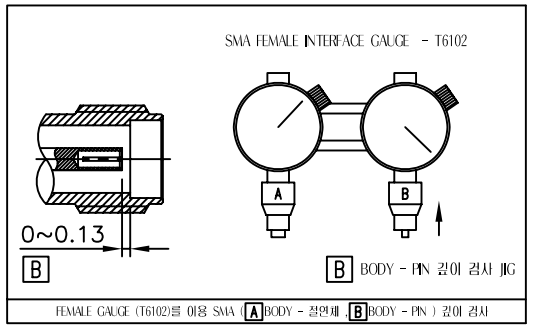

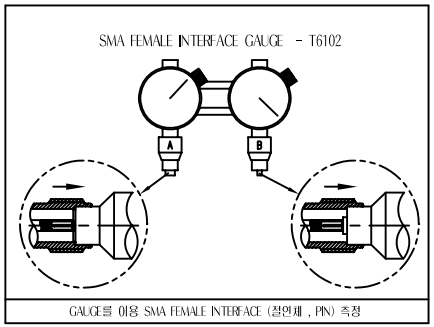

** PIN 높이 검사 방법 **

NO.	DESCRIPTION	Q'TY	MATERIAL	PLATING	CODE
3	INSULATOR	1	TEFLON		DIN02928-N/1
2	CONTACT	1	BeCu C17300	Gold Plate	DCT03864-5/4
1	BODY	1	SUS	Passivated	DBD04342-5/3

TOLERANCE	Decimal ±0.2	DATE	2018. 09. 18.
	Angle ±1°	APPROVED BY	I.C.KIM
		CHECKED BY	
MATERIAL		DRAWN BY	S.Y.EUN
FINISH		SCALE 4/1	UNIT mm

KJ COMTECH
KJ COMTECH CO.,LTD.
RF & MICROWAVE TECHNOLOGY
Tel : 82-32-347-8015
Fax : 82-32-347-8017

TITLE: 2.92mm SOLDER END JS-4H

A4 | DWG NO. CN03716-7/5 | REVISION I R | SHEET 1 of 1