REVISION

REV	DESCRIPTION	DRAWN	APPR	DATE
IR	Initial Registration	G.Y.KIM	I.C.KIM	2017.01.10.
1	고객사 요청으로 인한 본딩튜브 추가	S.Y.EUN	I.C.KIM	2018.03.27.
2	생산팀 요청으로 인한 본딩튜브 사이즈 변경 (ø13 → ø12)	S.Y.EUN	I.C.KIM	2021.02.24.

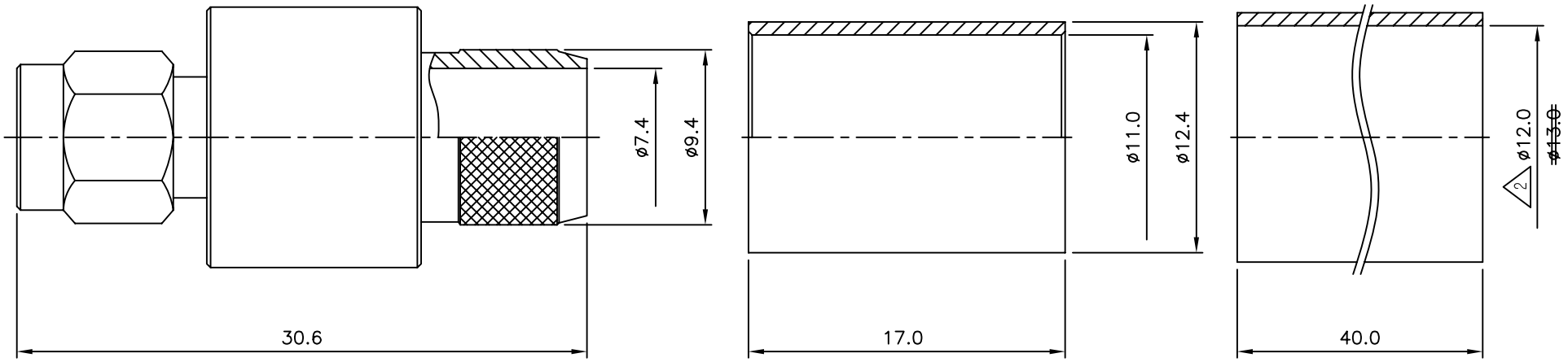

NO.	DESCRIPTION	Q'TY	MATERIAL	PLATING	CODE
8	BONDING TUBE	1	—	—	ATU00012-N/1 ~~ATU00013-N/1~~
7	SPRING RING	1	SUS	Passivate	DSR00002-5/1
6	COUPLING CAP	1	MBsBD C3604BD-F	Nickel Plate	DCU00005-5/2
5	INSULATOR	1	TEFLON		DIN02873-N/1
4	GASKET	1	SILICONE Rub		DGK00004-N/1
3	FERRULE	1	MBsBD C3604BD-F	Nickel Plate	DFE00070-5/1
2	CONTACT	1	MBsBD C3604BD-F	Gold Plate	DCT03807-5/1
1	BODY	1	MBsBD C3604BD-F	Nickel Plate	DBD04282-5/1

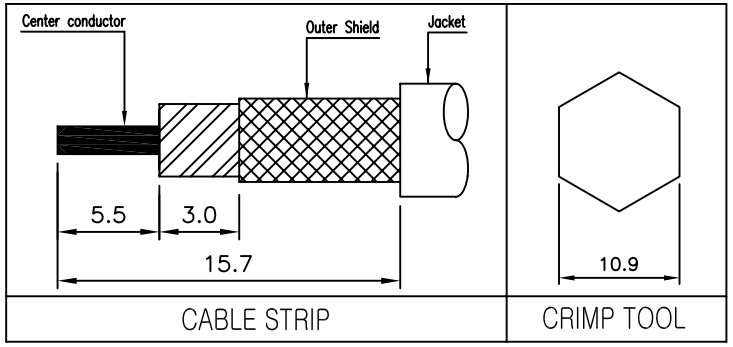

TOLERANCE	Decimal ±0.1	DATE	2021. 02. 24.
	Angle ±1°	APPROVED BY	I.C.KIM
		CHECKED BY	
MATERIAL		DRAWN BY	S.Y.EUN
FINISH		SCALE 3/1	UNIT mm

KJ COMTECH
KJ COMTECH CO.,LTD.
RF & MICROWAVE TECHNOLOGY
Tel : 82-32-347-8015
Fax : 82-32-347-8017

TITLE
SMA50 CABLE PS LMR400

A4 | DWG NO. CN03677-7/1 | REVISION 2 | SHEET 1 of 1