REVISION				
REV	DESCRIPTION	DRAWN	APPR	DATE
IR	Initial Registration	S.Y.EUN	I.C.KIM	2021.07.22.

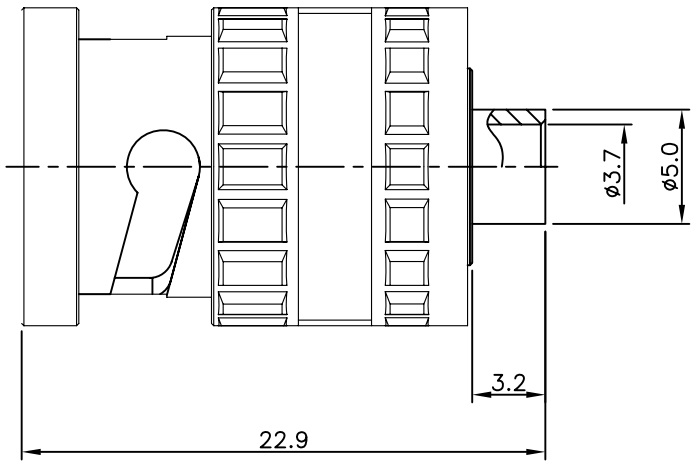

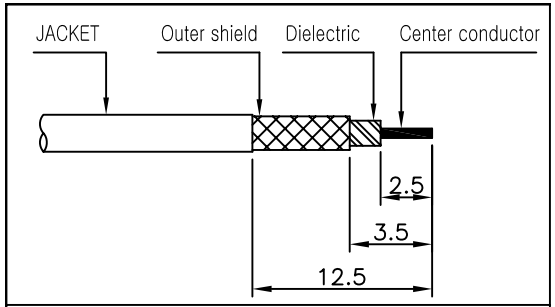

CABLE STRIP

NO.	DESCRIPTION	Q'TY	MATERIAL	PLATING	CODE
7	CAP	1	ZnDc	Nickel Plate	DCU02281-5/3
6	WASHER	1	BsS	Nickel Plate	DWA00136-5/1
5	WASHER	2	BeCu	Nickel Plate	DWA00069-5/1
4	INSULATOR	1	TEFLON		DIN02341-N/1
3	GASKET	1	SILICONE RUB		DGK00012-N/1
2	CONTACT	1	MBsBD C3604BD-F	Gold Plate	DCT04242-5/1
1	BODY	1	MBsBD C3604BD-F	Nickel Plate	DBD04765-5/1

TOLERANCE	Decimal ±0.2	DATE	2021. 07. 22.
	Angle ±1°	APPROVED BY	I.C.KIM
		CHECKED BY	
MATERIAL		DRAWN BY	S.Y.EUN
FINISH		SCALE 3/1	UNIT mm

KJ COMTECH
KJ COMTECH CO.,LTD.
RF & MICROWAVE TECHNOLOGY
Tel : 82-32-347-8015
Fax : 82-32-347-8017

TITLE
BNC50 CABLE PS 141F

A4

DWG NO. CN03639-7/B

REVISION I R

SHEET 1 of 1