| REVISION | | | | |
|---|---|---|---|---|
| REV | DESCRIPTION | DRAWN | APPR | DATE |
| IR | Initial Registration | C.K.KIM | I.C.KIM | 2016.05.17. |
| 1 | [설변No.201608-0004] 작업성 문제로 인한 BODY 가이드 추가 | H.J.LEE | I.C.KIM | 2016.08.11. |

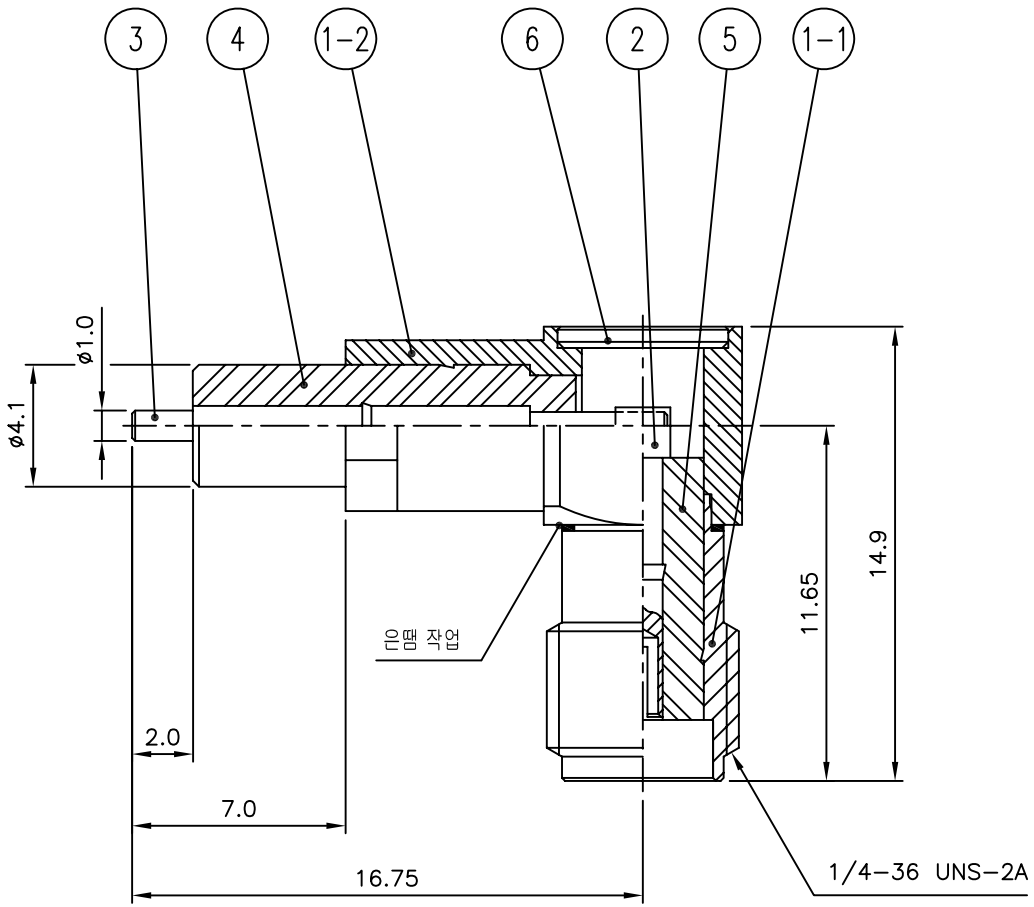


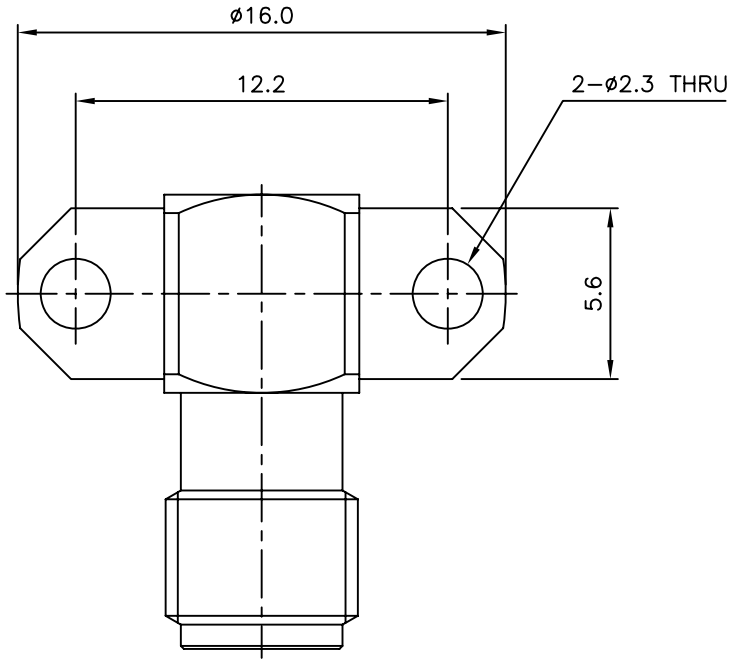


| NO. | | DESCRIPTION | Q'TY | MATERIAL | PLATING | CODE | |
|---|---|---|---|---|---|---|---|
| 6 | | COVER | 1 | MBsBD C3604BD-F | Nickel Plate | DCO00042-5/3 | |
| 5 | | INSULATOR | 1 | TEFLON | | DIN01238-N/1 | |
| 4 | | INSULATOR | 1 | TEFLON | | DIN00112-N/1 | |
| 3 | | CONTACT | 1 | MBsBD C3604BD-F | Gold Plate | DCT03671-5/1 | |
| 2 | | CONTACT | 1 | BeCu C17300 | Gold Plate | DCT00151-5/1 | |
| 1 | 1-2 | BODY(B) | 1 | MBsBD C3604BD-F | Nickel Plate | DBB00072-5/5 | DBD00206-1/3 |
| 1 | 1-1 | BODY(A) | 1 | MBsBD C3604BD-F | Nickel Plate | DBB00072-5/5 | DBD00223-1/1 |

| | | | |
|---|---|---|---|
| TOLERANCE | Decimal ±0.1 | DATE | 2016. 08. 11. |
| | Angle ±1° | APPROVED BY | I.C.KIM |
| MATERIAL | | CHECKED BY | |
| | | DRAWN BY | H.J.LEE |
| FINISH | | SCALE 4/1 | UNIT mm |


KJ COMTECH
KJ COMTECH CO.,LTD.
RF & MICROWAVE TECHNOLOGY
Tel : 82-32-347-8015
Fax : 82-32-347-8017


TITLE: SMA50 SOLDER END JL-2H

A4

DWG NO. CN03585-7/1

REVISION 1

SHEET 1 of 1