REVISION				
REV	DESCRIPTION	DRAWN	APPR	DATE
IR	Initial Registration	H.J.LEE	I.C.KIM	2016.03.31.

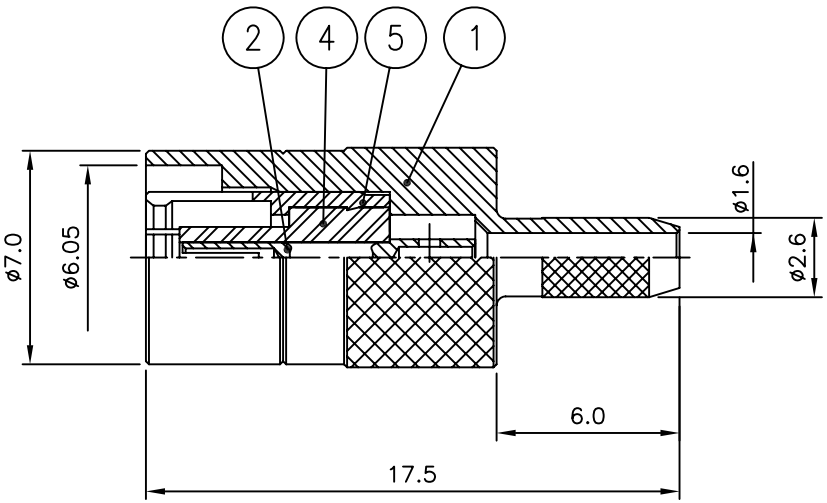

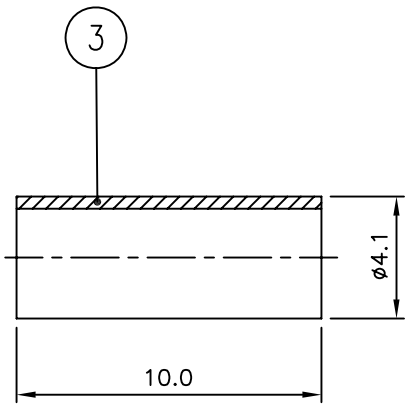

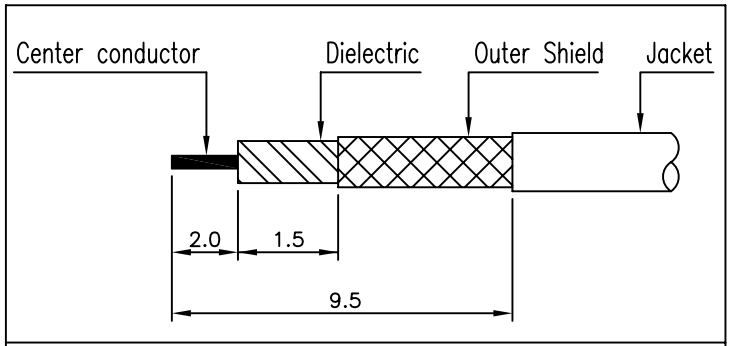

CABLE 탈피도

NO.	DESCRIPTION	Q'TY	MATERIAL	PLATING	CODE
5	JACK	1	MBsBD C3604BD-F	Nickel Plate	DJA00159-5/5
4	INSULATOR	1	TEFLON		DIN02179-N/1
3	FERRULE	1	MBsBD C3604BD-F	Nickel Plate	DFE00075-5/1
2	CONTACT	1	BeCu C17300	Gold Plate	DCT02834-5/1
1	BODY	1	MBsBD C3604BD-F	Nickel Plate	DBD04069-5/2

TOLERANCE	Decimal ±0.1	DATE	2016. 03. 31.
	Angle ±1°	APPROVED BY	I.C.KIM
		CHECKED BY	
MATERIAL		DRAWN BY	H.J.LEE
FINISH		SCALE 4/1	UNIT mm

KJ COMTECH
KJ COMTECH CO.,LTD.
RF & MICROWAVE TECHNOLOGY
Tel : 82-32-347-8015
Fax : 82-32-347-8017

TITLE SMBL50 CABLE JS RG316DS (MATING 5.9 TRANS)

A4 DWG NO. CN03524-7/3

REVISION I R SHEET 1 of 1