REVISION				
REV	DESCRIPTION	DRAWN	APPR	DATE
IR	Initial Registration	H.J.LEE	I.C.KIM	2016.01.18.

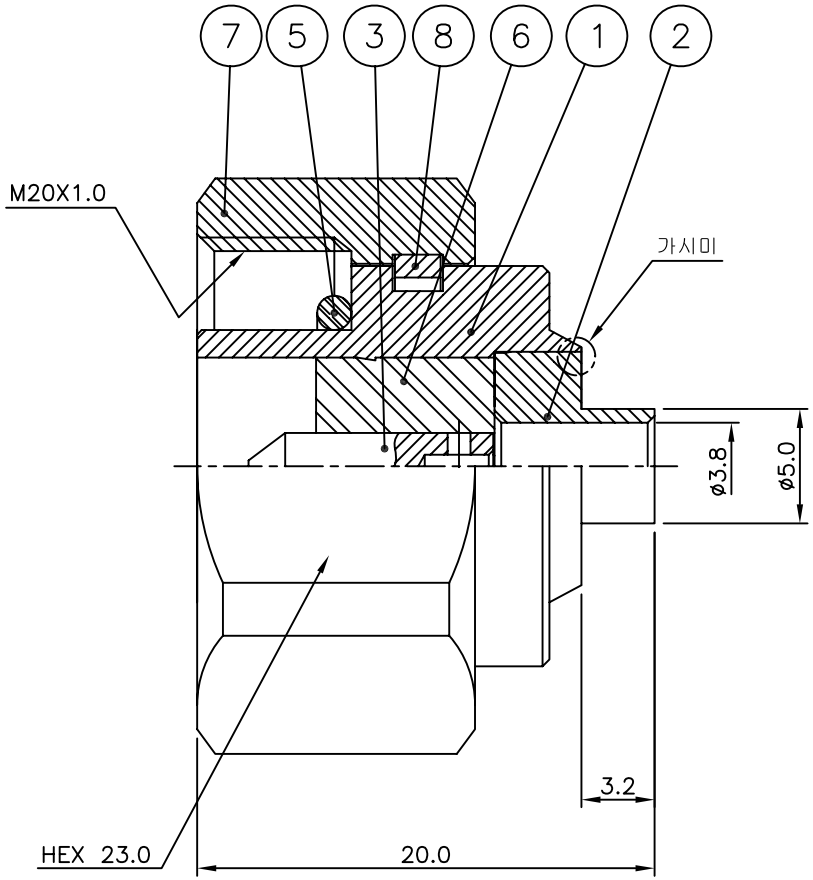

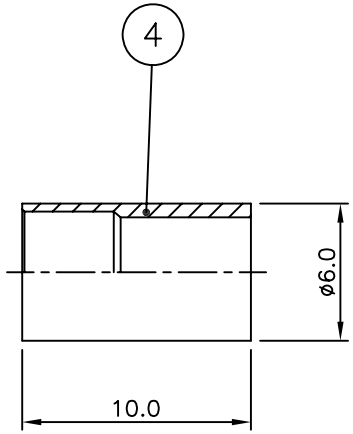

주 기

1. CAP 조립전 가시미 작업 진행

NO.	DESCRIPTION	Q'TY	MATERIAL	PLATING	CODE
8	SPRING RING	1	PBR	Nickel Plate	DSR00020-5/1
7	COUPLING CAP	1	MBsBD C3604BD-F	SUCO Plate	DCU02257-5/4
6	INSULATOR	1	TEFLON		DIN02687-N/1
5	GASKET	1	SILICONE RUB		DGK00121-N/1
4	FERRULE	1	MBsBD C3604BD-F	Nickel Plate	DFE00163-5/1
3	CONTACT	1	MBsBD C3604BD-F	Silver Plate (5㎛)	DCT03592-5/2
2	BODY	1	MBsBD C3604BD-F	SUCO Plate	DBD03073-5/2
1	BODY	1	MBsBD C3604BD-F	SUCO Plate	DBD04068-5/2

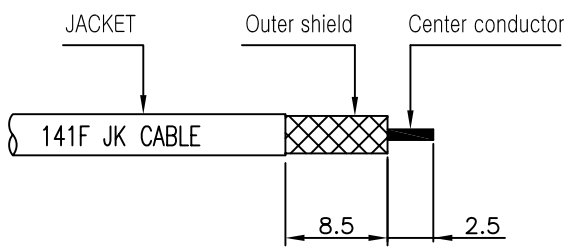

CABLE 탈피도

TOLERANCE	Decimal ±0.1	DATE	2016. 01. 18.
	Angle ±1°	APPROVED BY	I.C.KIM
		CHECKED BY	
MATERIAL		DRAWN BY	H.J.LEE
FINISH		SCALE 3/1	UNIT mm

KJ COMTECH
KJ COMTECH CO.,LTD.
RF & MICROWAVE TECHNOLOGY
Tel : 82-32-347-8015
Fax : 82-32-347-8017

TITLE

4.1/9.5 DIN50 CABLE PS 141FJ

A4

DWG NO. CN03523-7/2

REVISION I R

SHEET 1 of 1