REVISION				
REV	DESCRIPTION	DRAWN	APPR	DATE
IR	Initial Registration	Y.H.CHOI	I.C.KIM	2016.01.15.

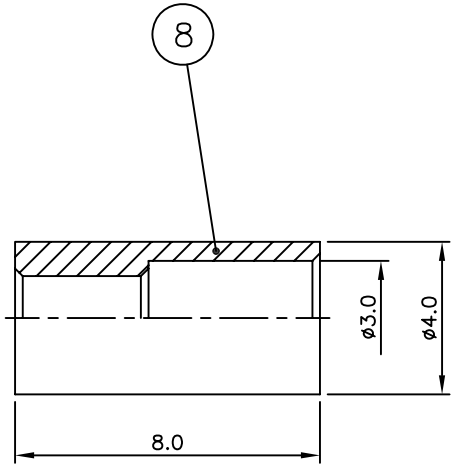

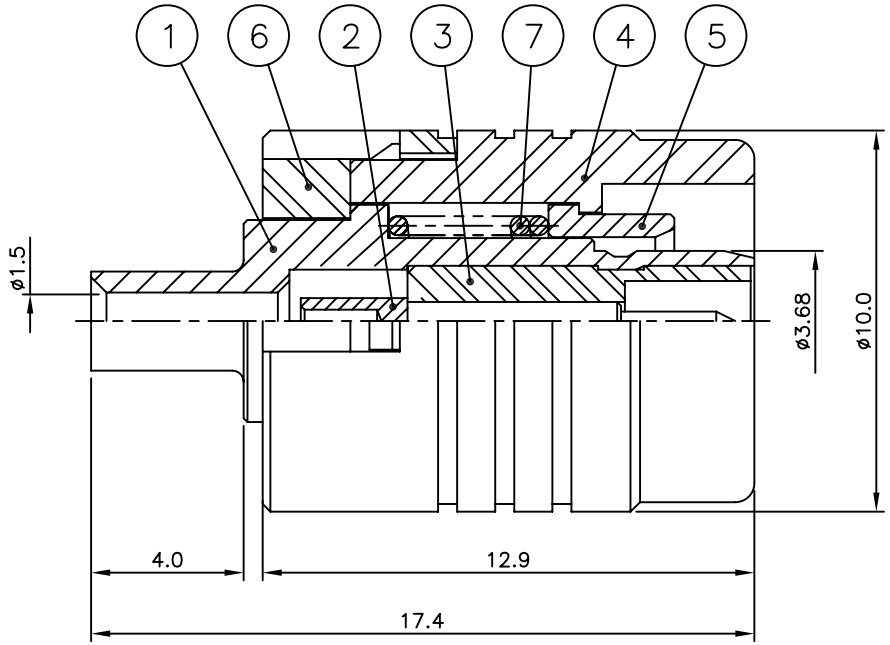

NO.	DESCRIPTION	Q'TY	MATERIAL	PLATING	CODE
8	FERRULE	1	MBsBD C3604BD-F	Nickel Plate	DFE00185-5/1
7	SPRING	1	SUS	Passivated	DSR01141-5/1
6	COVER	1	PBT		DCV00087-N/1
5	INSERT	1	MBsBD C3604BD-F	Nickel Plate	DIS00237-5/1
4	CAP	1	PBT		DCU02274-N/1
3	INSULATOR	1	TEFLON		DIN02021-N/1
2	CONTACT	1	MBsBD C3604BD-F	Gold Plate	DCT03627-5/3
1	BODY	1	MBsBD C3604BD-F	Nickel Plate	DBD04106-5/1

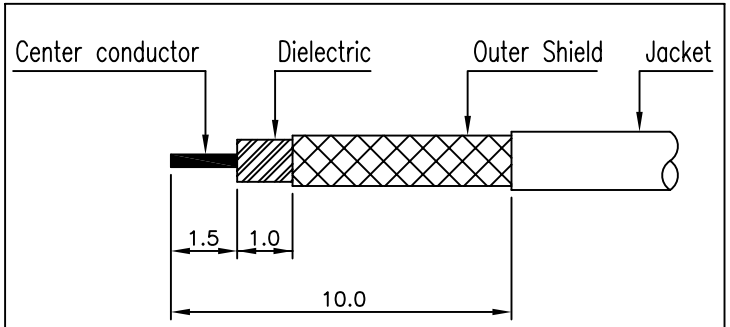

CABLE 탈피도

TOLERANCE	Decimal ±0.1	DATE	2016. 01. 15.
	Angle ±1°	APPROVED BY	I.C.KIM
		CHECKED BY	S.M.LEE
MATERIAL		DRAWN BY	Y.H.CHOI
FINISH		SCALE 5/1	UNIT mm

KJ COMTECH
KJ COMTECH CO.,LTD.
RF & MICROWAVE TECHNOLOGY
Tel : 82-32-347-8015
Fax : 82-32-347-8017

TITLE: QMBL50 CABLE PS RF-1.37

A4

DWG NO. CN03500-7/3

REVISION I R

SHEET 1 of 1