REVISION				
REV	DESCRIPTION	DRAWN	APPR	DATE
IR	Initial Registration	H.J.LEE	I.C.KIM	2015.06.10.

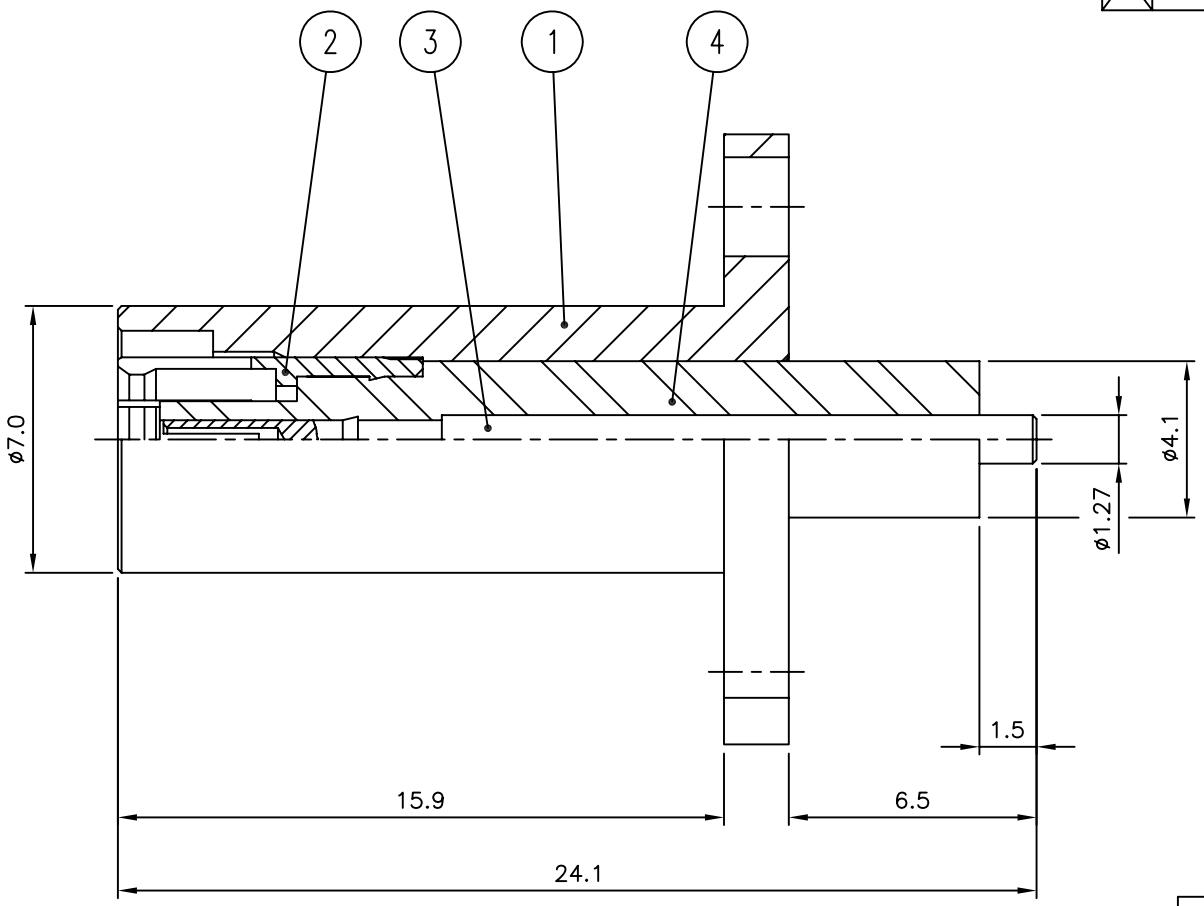

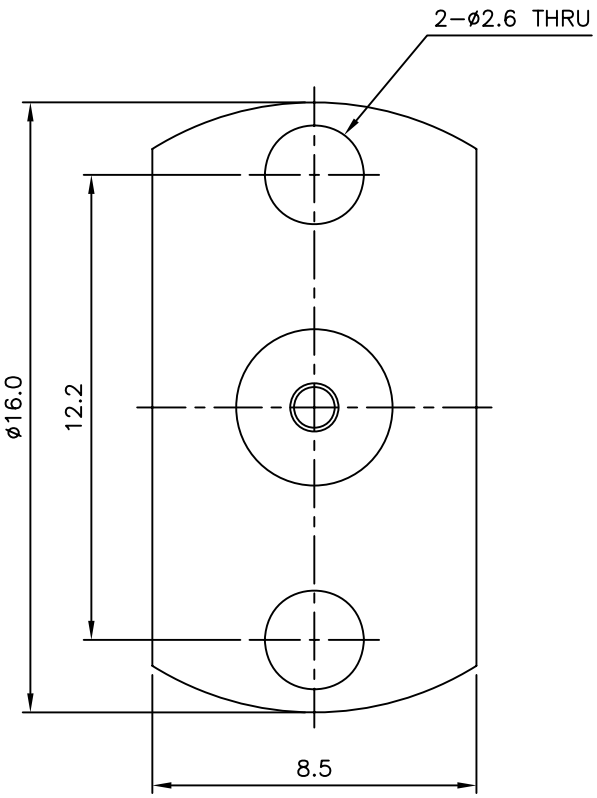

NO.	DESCRIPTION	Q'TY	MATERIAL	PLATING	CODE
4	INSULATOR	1	TEFLON		DIN02603-N/1
3	CONTACT	1	BeCu C17300	Gold Plate	DCT03495-5/1
2	JACK	1	MBsBD C3604BD-F	Nickel Plate	DJA00159-5/5
1	BODY	1	MBsBD C3604BD-F	Nickel Plate	DBD03954-5/1

TOLERANCE	Decimal ±0.1	DATE	2015. 06. 10.
	Angle ±1°	APPROVED BY	I.C.KIM
MATERIAL		CHECKED BY	S.M.LEE
		DRAWN BY	H.J.LEE
FINISH		SCALE 5/1	UNIT mm

KJ COMTECH
KJ COMTECH CO.,LTD.
RF & MICROWAVE TECHNOLOGY
Tel : 82-32-347-8015
Fax : 82-32-347-8017

TITLE
SMBL50 SOLDER END JS-2H

A4

DWG NO. CN03432-7/1

REVISION I R

SHEET 1 of 1