REVISION				
REV	DESCRIPTION	DRAWN	APPR	DATE
IR	Initial Registration	I.C.KIM		2016.02.03.
1	[설변No.201603-0001]핀,테프론 높이 및 메이팅부 길이,도금 변경	C.K.KIM	I.C.KIM	2016.03.02.
2	[설변No.201712-0002] 케이블 변경으로 인해 케이블 삽입부 바디 내경 수정	S.Y.EUN	I.C.KIM	2017.12.26.

* 삽이탈력 확인 (KMS-180) - 상대물 체결
-삽입력 : 0.6~1.0Kgf
-이탈력 : 0.5~0.9Kgf

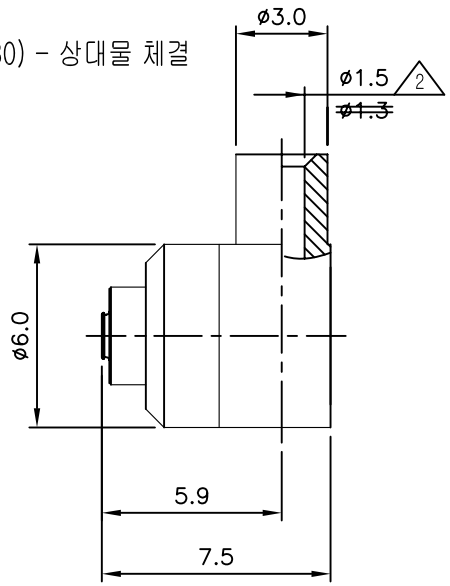

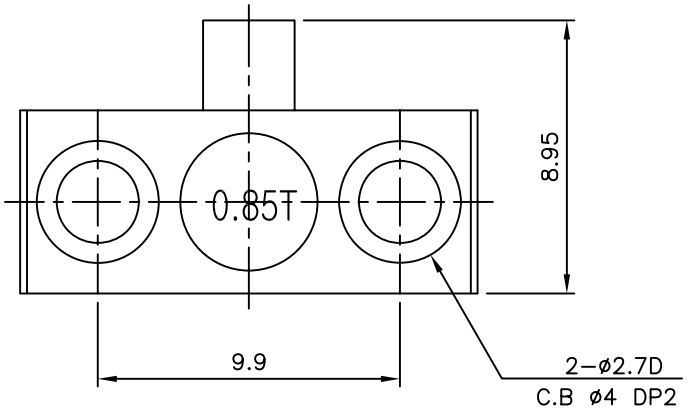

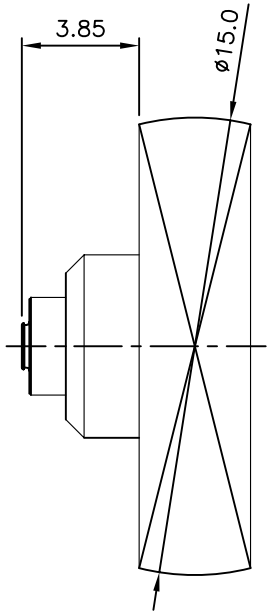

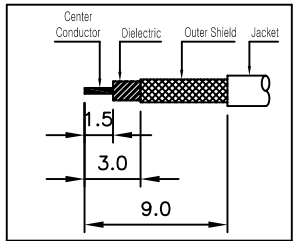

②.③CONNECTOR CABLE 탈피도

NO.		DESCRIPTION	Q'TY	MATERIAL	PLATING	CODE	
5		COVER	1	MBsBD C3604BD-F	Nickel Plate	DCO00020-5/2	
4		INSULATOR	1	TEFLON		DIN00921-N/1	
3		INSULATOR	1	TEFLON		DIN02724-N/1	
2		CONTACT	1	MBsBD C3604BD-F	Gold Plate	DCT03492-5/2	
2 1	1-2	BODY	1	MBsBD C3604BD-F	Nickel Plate	DBB00416-3/2	DBD03906-5/1
1 1	1-1	BODY	1	SUS303	Nickel Plate		DBD03947-5/2

TOLERANCE	Decimal ±0.2	DATE	2017. 12. 26.
	Angle ±1°	APPROVED BY	I.C.KIM
		CHECKED BY	
MATERIAL	———	DRAWN BY	S.Y.EUN
FINISH	———	SCALE 4/1	UNIT mm

KJ COMTECH
KJ COMTECH CO.,LTD.
RF & MICROWAVE TECHNOLOGY
Tel : 82-32-347-8015
Fax : 82-32-347-8017

TITLE KMS-180 CABLE JL-2H RF-ø1.37

A4 DWG NO. CN03429-7/2
REVISION 2 SHEET 1 of 1