REVISION				
REV	DESCRIPTION	DRAWN	APPR	DATE
IR	Initial Registration	S.M.LEE	I.C.KIM	2015.03.03.
1	[설변No.201810-0003] 원가절감 및 MATING 개선으로 인한 링 삭제	S.Y.EUN	I.C.KIM	2018.10.10.
2	[설변No.201911-0007] 텐션 보강용 C-RING 재추가 (DSR00007-5/1)	S.Y.EUN	I.C.KIM	2019.11.06.

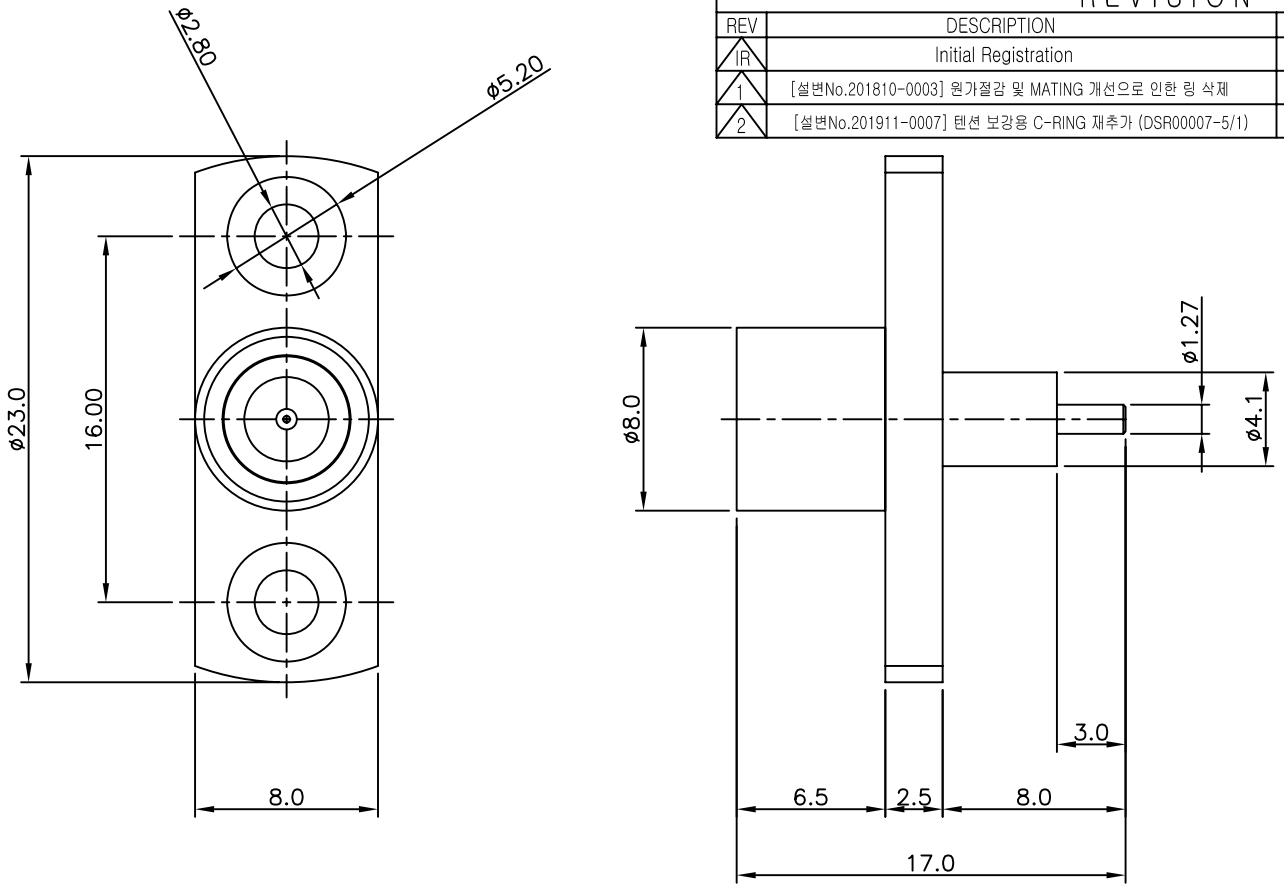

	NO.	DESCRIPTION	Q'TY	MATERIAL	PLATING	CODE
	5	INSULATOR	1	TEFLON		DIN02557-N/1
2 1	4	SPRING RING	1	BeCu	Nickel Plate	DSR00007-5/1
	3	JACK	1	MBsBD	Nickel Plate	DJA00212-5/1
	2	CONTACT	1	MBsBD	Gold Plate	DCT03426-5/1
	1	BODY	1	MBsBD	Nickel Plate	DBD03896-5/1

Notes

1. RoHS & Pb-FREE
2. CONNECTOR FINISHES
   2-1. BODY : BRASS / Nickel Plating
   2-2. CONTACT : BRASS / Gold Plating
   2-3. INSULATOR : PTFE

TOLERANCE	Decimal ±0.1	DATE	2019. 11. 06.
	Angle ±1°	APPROVED BY	I.C.KIM
		CHECKED BY	
MATERIAL		DRAWN BY	S.Y.EUN
FINISH		SCALE 3/1	UNIT mm

KJ COMTECH
KJ COMTECH CO.,LTD.
RF & MICROWAVE TECHNOLOGY
Tel : 82-32-347-8015
Fax : 82-32-347-8017

TITLE
PDM(Φ5.5) SOLDER END PS-2H

A4

DWG NO. CN03395-7/1

REVISION 2

SHEET 1 of 1