REVISION				
REV	DESCRIPTION	DRAWN	APPR	DATE
IR	Initial Registration	S.Y.EUN	I.C.KIM	2018.12.21.
1	[설변No.201901-0001] 가공문제로 인한 절연체 분할	S.Y.EUN	I.C.KIM	2019.01.04.
2	[설변No.201901-0002] 가공업체 요청으로 인한 절연체 분할 전으로 재변경	S.Y.EUN	I.C.KIM	2019.01.15.

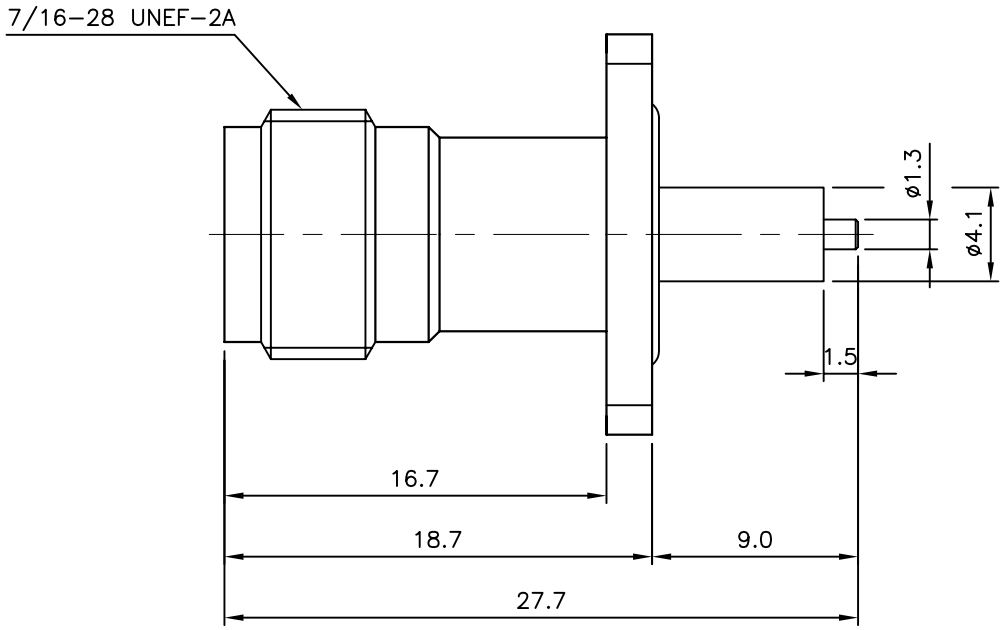

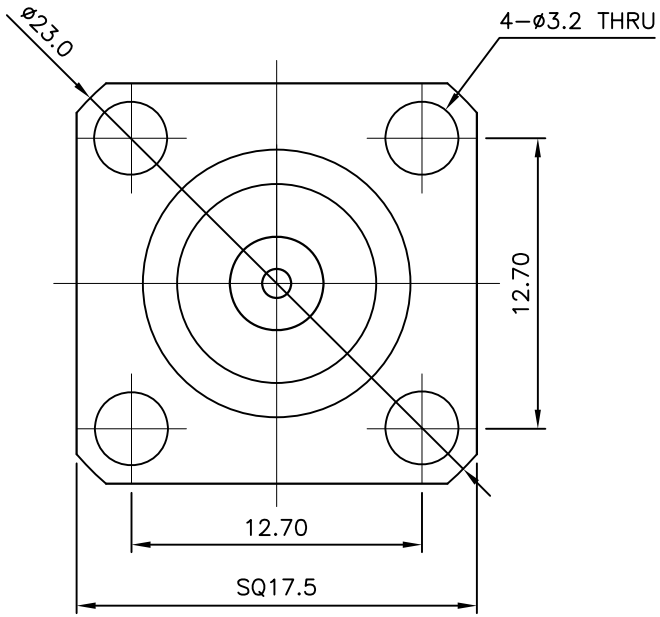

*ELECTRICAL

Impedance : 50 Ohm
Freq. Range : DC to 6 GHz
VSWR : 1.22:1
Working Voltage :500 Vrms @Sea level
Dielectric Withstand Voltage : 1500Vrms
Insulation Resistance :5000 MOhms Min
Contact Resistance (center):2.0 mohm
(outer):3.0 mohm

*MECHANICAL

Interface Dimensions : MIL-STD-348
Force to Engage and Disengage : N/A
Coupling Nut Retention Force and Proof Torque N/A
Connector Durability : 500 mating cycles min.

*ENVIRONMENTAL

Temp. Range : -65°C to +125°C
Thermal Shock : MIL-STD-202, Method 107, Test Cond. B
Vibration : MIL-STD-202, Method 204, Test Cond. D
Shock : MIL-STD-202, Method 213, Test Cond. I

	NO.	DESCRIPTION	Q'TY	MATERIAL	PLATING	CODE
	5	GASKET	1	Silicon Rubber		DGK00028-N/1
1	~~4~~	~~INSULATOR~~	~~1~~	~~TEFLON~~		~~DIN03023-N/1~~
2 1	3	INSULATOR	1	TEFLON		DIN02547-N/2
	2	CONTACT	1	BeCu C17300	Gold Plate (1.27㎛)	DCT03413-5/3
	1	BODY	1	SUS303	부동태 처리	DBD03881-5/1

TOLERANCE	Decimal ±0.2	DATE	2019. 01. 15.
	Angle ±1°	APPROVED BY	I.C.KIM
MATERIAL		CHECKED BY	
		DRAWN BY	S.Y.EUN
FINISH		SCALE 3/1	UNIT mm

KJ COMTECH
KJ COMTECH CO.,LTD.

RF & MICROWAVE TECHNOLOGY
Tel : 82-32-347-8015
Fax : 82-32-347-8017

TITLE
TNC50 SOLDER END JS-4H

A4
DWG NO. CN03385-7/4
REVISION 2
SHEET 1 of 1