REVISION				
REV	DESCRIPTION	DRAWN	APPR	DATE
IR	Initial Registration	S.M.LEE	I.C.KIM	2015.04.07.

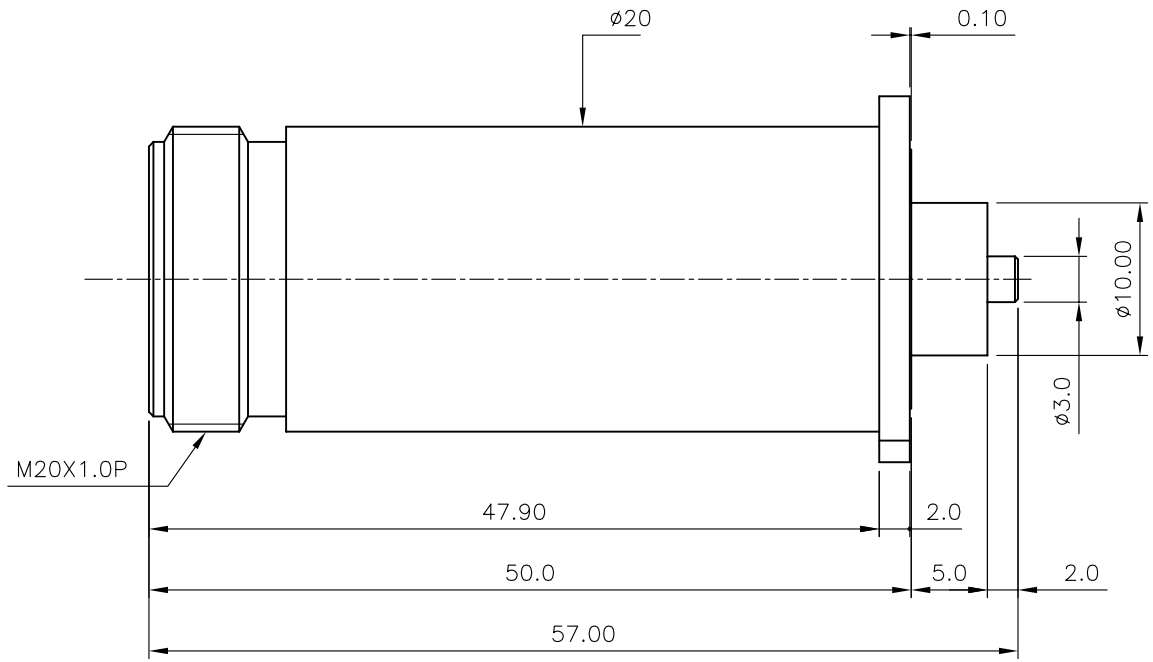

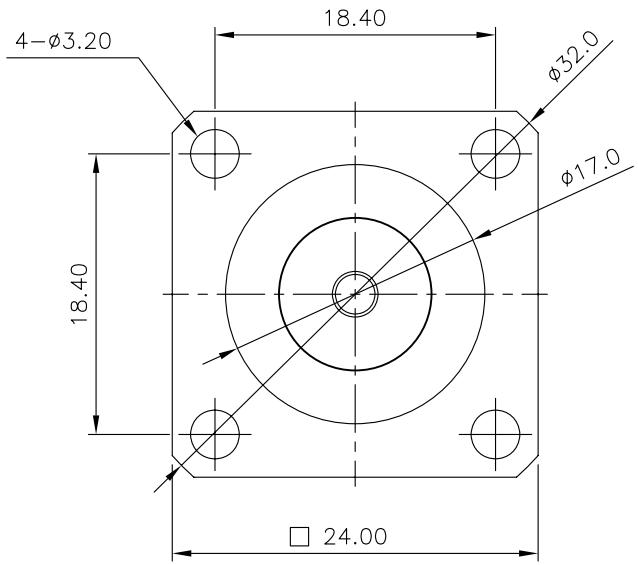

NO.	DESCRIPTION	Q'TY	MATERIAL	PLATING	CODE
5	INSULATOR	1	TEFLON		DIN02512-N/1
4	INSULATOR	1	TEFLON		DIN01938-N/1
3	CONTACT	1	MBsBD C3604BD-F	Silver 5㎛ min.	DCT03331-5/2
2	CONTACT	1	BeCu C17300	Silver 5㎛ min.	DCT03330-5/2
1	BODY	1	MBsBD C3604BD-F	SUCO 5㎛ min.	DBD03820-5/2

※주기 1

3번핀에 5번절연체 조립 후 2번핀 조립하고 납땜 할 것.

TOLERANCE	Decimal ±0.1	DATE	2015. 04. 07.
	Angle ±1°	APPROVED BY	I.C.KIM
		CHECKED BY	
MATERIAL		DRAWN BY	S.M.LEE
FINISH		SCALE 2/1	UNIT mm

KJ COMTECH
KJ COMTECH CO.,LTD.
RF & MICROWAVE TECHNOLOGY
Tel : 82-32-347-8015
Fax : 82-32-347-8017

TITLE
4.1/9.5DIN50 SOLDER END JS-4H

A4

DWG NO. CN03358-7/2

REVISION I R

SHEET 1 of 1