REVISION

REV	DESCRIPTION	DRAWN	APPR	DATE
IR	Initial Registration	H.J.LEE	I.C.KIM	2014.12.09.
1	[설변No.201501-0001] 업체요청사항 (조립시 특성 불량으로 인해 BODY 돌출 길이 변경 및 다리 턱 추가)	H.J.LEE	I.C.KIM	2015.01.06.
2	[설변No.201806-0002] QMA 표준화 치수 변경	S.Y.EUN	I.C.KIM	2018.06.07.

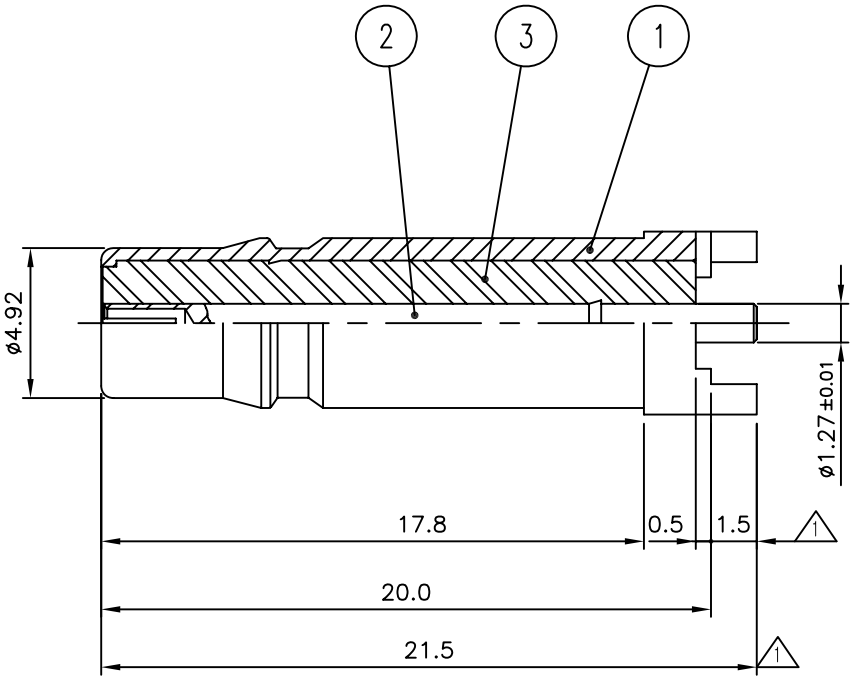

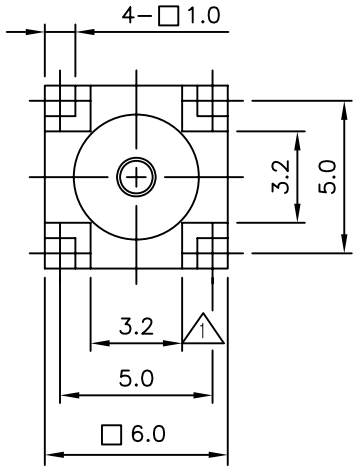

NO.	DESCRIPTION	Q'TY	MATERIAL	PLATING	CODE
3	INSULATOR	1	TEFLON		DIN02523-N/1
2	CONTACT	1	BeCu	Gold Plate	DCT03314-5/2
1	BODY	1	MBsBD	Nickel Plate	DBD03798-5/3 ~~DBD03798-5/2~~

2 1

TOLERANCE	Decimal ±0.1	DATE	2018. 06. 07.
	Angle ±1°	APPROVED BY	I.C.KIM
		CHECKED BY	
MATERIAL		DRAWN BY	S.Y.EUN
FINISH		SCALE 4/1	UNIT mm

KJ COMTECH
KJ COMTECH CO.,LTD.
RF & MICROWAVE TECHNOLOGY
Tel : 82-32-347-8015
Fax : 82-32-347-8017

TITLE: KQMA50 PCB JS-4R

A4 | DWG NO. CN03347-7/3 | REVISION 2 | SHEET 1 of 1