REVISION				
REV	DESCRIPTION	DRAWN	APPR	DATE
1	Initial Registration	T.J.KIM	J.H.YOUN	2014.10.07.
2	특성개선 Rev.	T.J.KIM	J.H.YOUN	2014.11.25.
3	[설변No.201506-0012] BODY 턱 추가 및 절연체 형상 변경	H.J.LEE	I.C.KIM	2015.06.10.

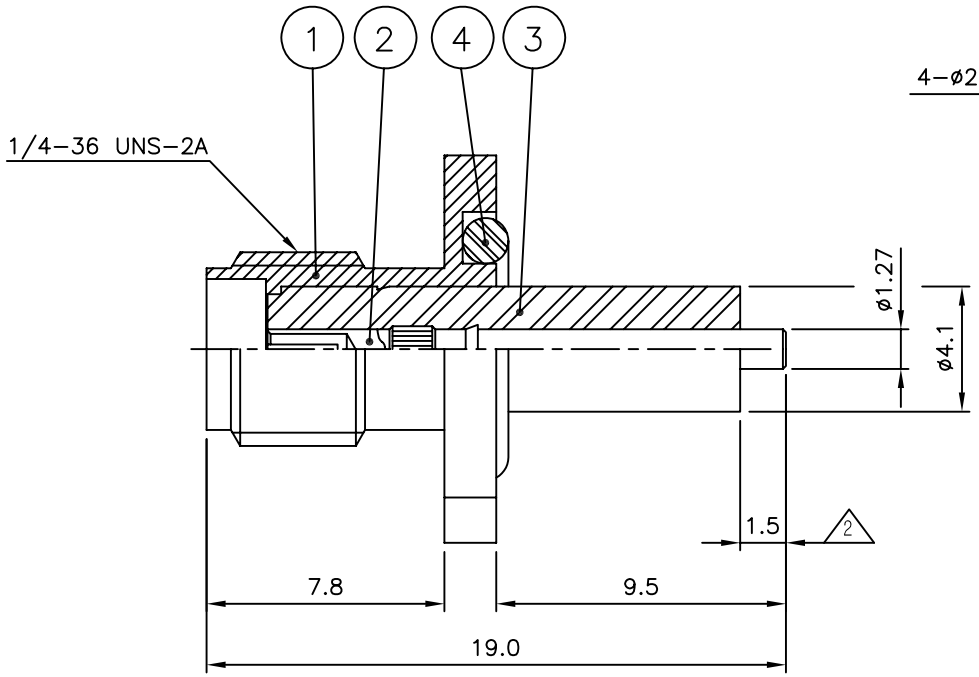

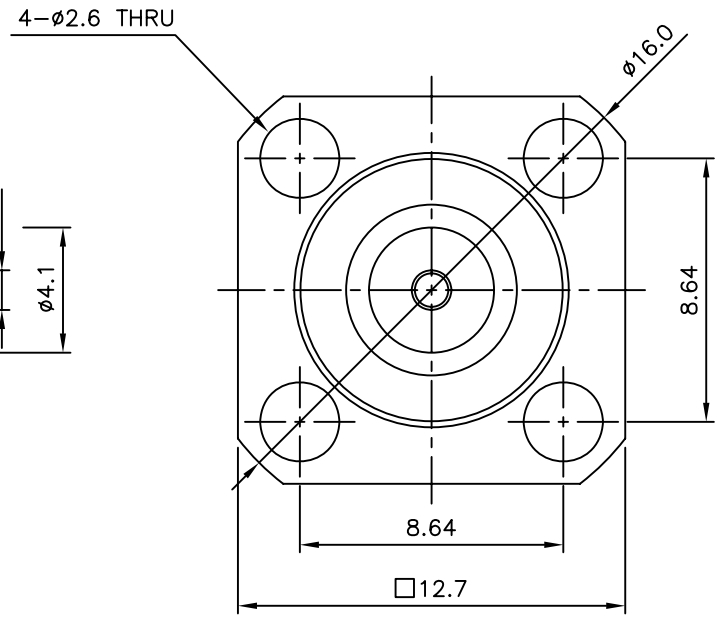

	NO.	DESCRIPTION	Q'TY	MATERIAL	PLATING	CODE
	4	GASKET	1	SILICONE RUBB		DGK00020-N/1
3	3	INSULATOR	1	TEFLON		DIN02607-N/1 ~~DIN02463-N/1~~
2	2	CONTACT	1	BeCu C17300	Gold Plate	DCT03241-5/2
3	1	BODY	1	MBsBD C3604BD-F	Nickel Plate (5μm)	DBD03734-5/1

TOLERANCE	Decimal ±0.1	DATE	2015. 06. 10.
	Angle ±1°	APPROVED BY	I.C.KIM
MATERIAL	———	CHECKED BY	S.M.LEE
		DRAWN BY	H.J.LEE
FINISH	———	SCALE 4/1	UNIT mm

KJ COMTECH
KJ COMTECH CO.,LTD.
RF & MICROWAVE TECHNOLOGY
Tel : 82-32-347-8015
Fax : 82-32-347-8017

TITLE: SMA50 SOLDER END JS-4H

A4 | DWG NO. CN03301-7/2 | REVISION 3 | SHEET 1 of 1