REVISION				
REV	DESCRIPTION	DRAWN	APPR	DATE
IR	Initial Registration	E.H.KIM	I.C.KIM	2014.10.07.
1	[설변No.201810-0003] 원가절감 및 MATING 개선으로 인한 링 삭제	S.Y.EUN	I.C.KIM	2018.10.10.
2	[설변No.202006-0005] 메이팅 표준화로 인한 링 재추가	S.Y.EUN	I.C.KIM	2020.06.17.

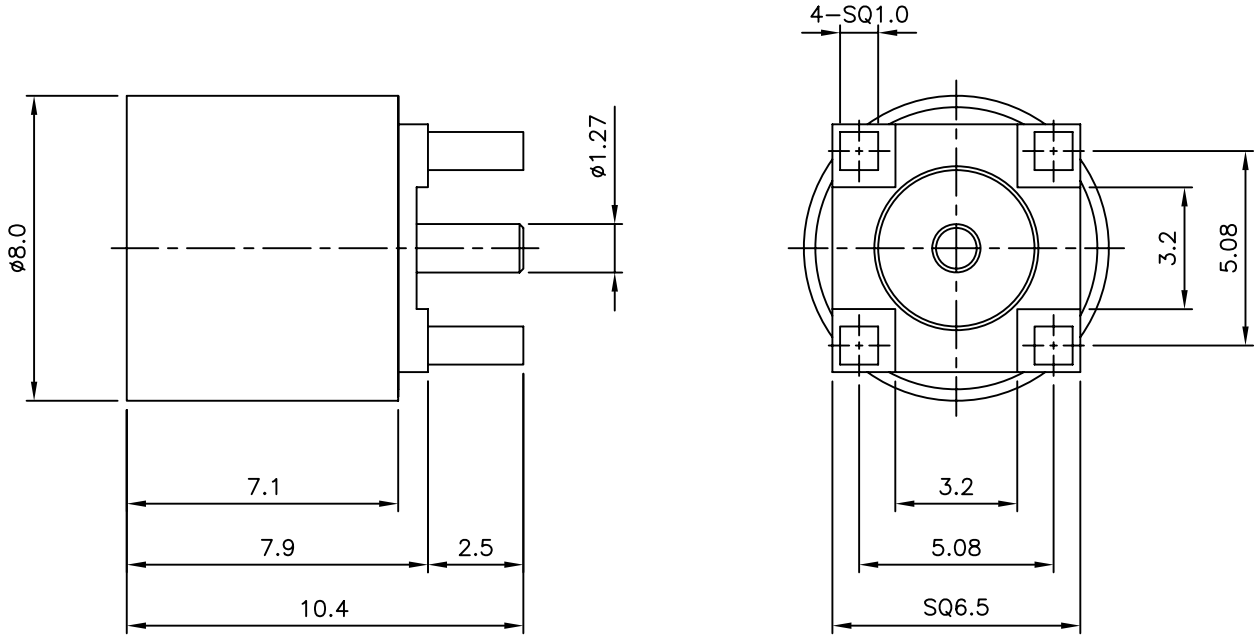

NO.	DESCRIPTION	Q'TY	MATERIAL	PLATING	CODE
5	SPRING RING	1	BeCu	Nickel Plate	DSR00007-5/1
4	CAP	1	MBsBD	Nickel Plate	DCU02222-5/1
3	INSULATOR	1	TEFLON		DIN02457-N/1
2	CONTACT	1	MBsBD	Gold Plate	DCT03230-5/1
1	BODY	1	MBsBD	Nickel Plate	DBD03729-5/1

TOLERANCE	Decimal ±0.1	DATE	2020. 06. 17.
	Angle ±1°	APPROVED BY	I.C.KIM
		CHECKED BY	
MATERIAL		DRAWN BY	S.Y.EUN
FINISH		SCALE 5/1	UNIT mm

KJ COMTECH
KJ COMTECH CO.,LTD.
RF & MICROWAVE TECHNOLOGY
Tel : 82-32-347-8015
Fax : 82-32-347-8017

TITLE
SMA TRANS(⌀5.5) PCB PS-4R

A4 | DWG NO. CN03297-7/1 | REVISION 2 | SHEET 1 of 1