REVISION				
REV	DESCRIPTION	DRAWN	APPR	DATE
IR	Initial Registration	S.H.KIM		2024.11.01.

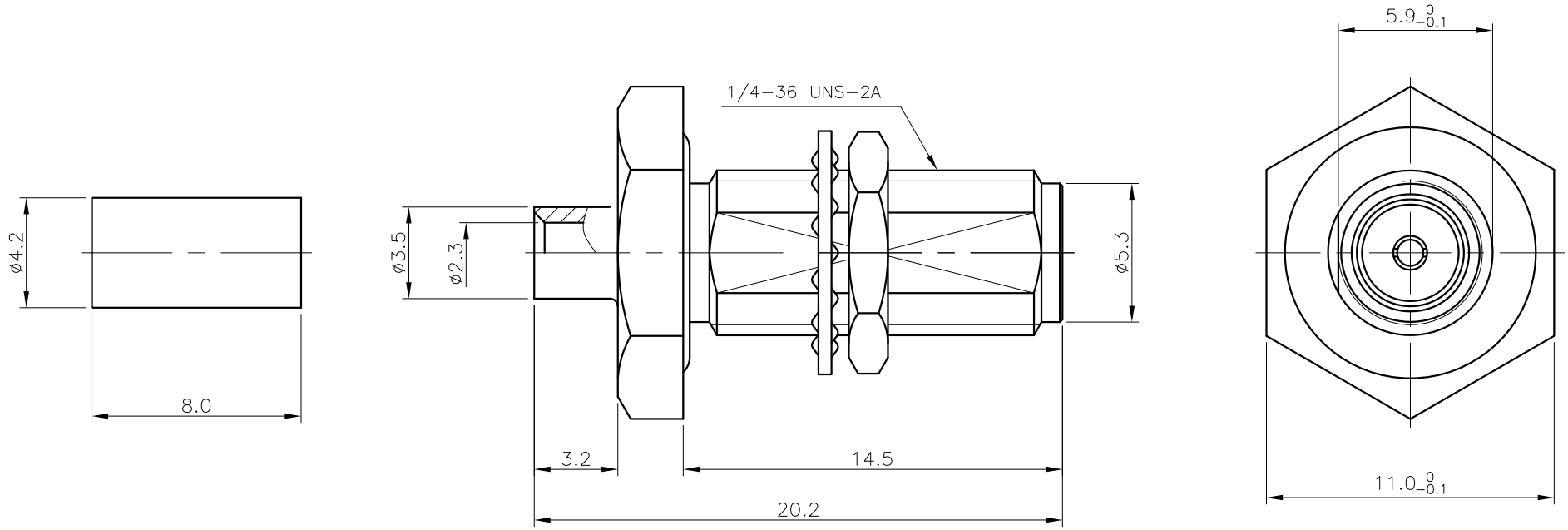

NO.	DESCRIPTION	Q'TY	MATERIAL	PLATING	CODE
7	WASHER	1	BsS	Nickel Plate	DWA00005-5/3
6	NUT	1	MBsBD C3604BD-F	Nickel Plate	DNT00025-N/5
5	INSULATOR	1	TEFLON		DIN00191-N/1
4	GASKET	1	SILICONE	RED	DGK00023-N/2
3	FERRULE	1	MBsBD C3604BD-F	Nickel Plate	DFE00161-5/1
2	CONTACT	1	BeCu C17300	Gold Plate	DCT00137-5/1
1	BODY	1	MBsBD C3604BD-F	Nickel Plate	DBD00188-5/3

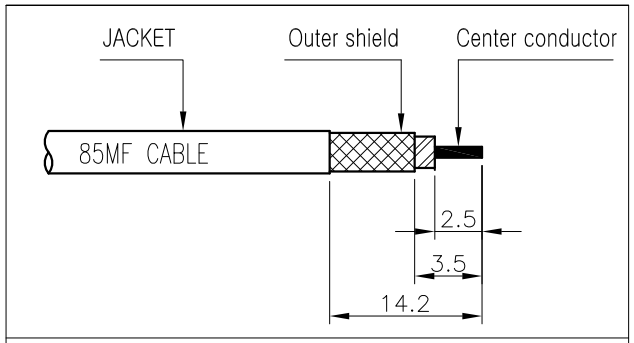

CABLE 탈피도

TOLERANCE	Decimal ±0.2	DATE	2024. 11. 01.
	Angle ±1°	APPROVED BY	
		CHECKED BY	
MATERIAL	-	DRAWN BY	S.H.KIM
FINISH	-	SCALE 4/1	UNIT mm

KJ COMTECH
KJ COMTECH CO.,LTD.
RF & MICROWAVE TECHNOLOGY
Tel : 82-32-347-8015
Fax : 82-32-347-8017

TITLE
SMA50 CABLE JB 85MF

A4
DWG NO. CN03293-7/5
REVISION I R
SHEET 1 of 1