REVISION				
REV	DESCRIPTION	DRAWN	APPR	DATE
IR	Initial Registration	M.H.SONG	I.C.KIM	2014.06.23.

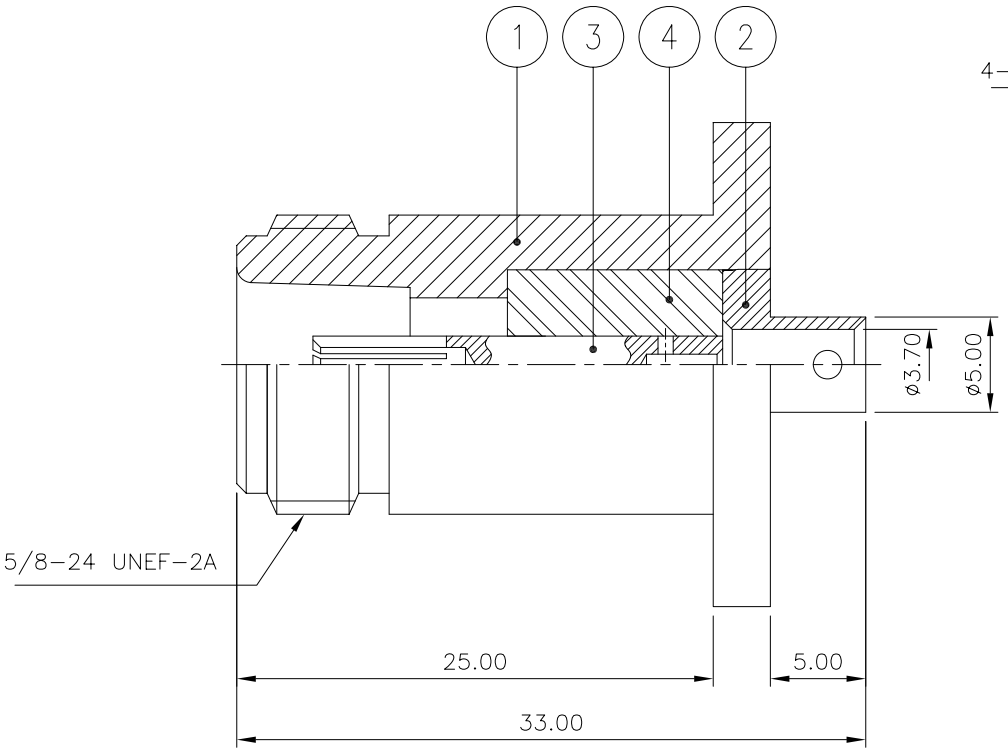

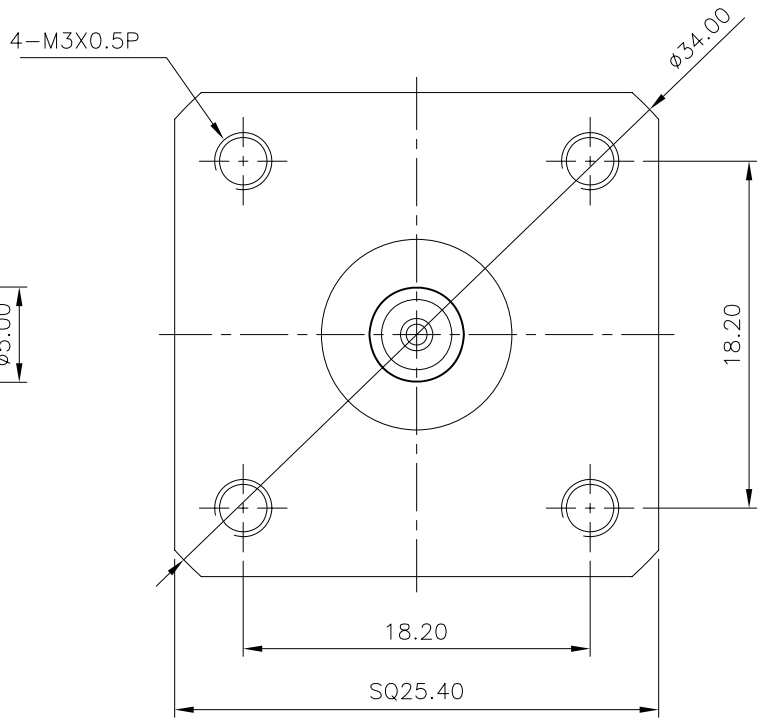

NO.	DESCRIPTION	Q'TY	MATERIAL	PLATING	CODE
4	INSULATOR	1	TEFLON		DIN02403-N/1
3	CONTACT	1	BeCu	Silver 3.0㎛ min.	DCT03148-5/1
2	BODY	1	MBsBD	SUCO 3.0㎛ min.	DBD03653-5/1
1	BODY	1	MBsBD	SUCO 3.0㎛ min.	DBD03652-5/1

TOLERANCE	Decimal ±0.1	DATE	2014. 06. 23.
	Angle ±1°	APPROVED BY	I.C.KIM
		CHECKED BY	-
MATERIAL		DRAWN BY	M.H.SONG
FINISH		SCALE 5/1	UNIT mm

KJ COMTECH
KJ COMTECH CO.,LTD.
RF & MICROWAVE TECHNOLOGY
Tel : 82-32-347-8015
Fax : 82-32-347-8017

TITLE
N50 CABLE JS-4H 141

A4 | DWG NO. CN03242-7/1 | REVISION I R | SHEET 1 of 1