REVISION				
REV	DESCRIPTION	DRAWN	APPR	DATE
IR	Initial Registration	M.H.SONG	I.C.KIM	2014.05.12.

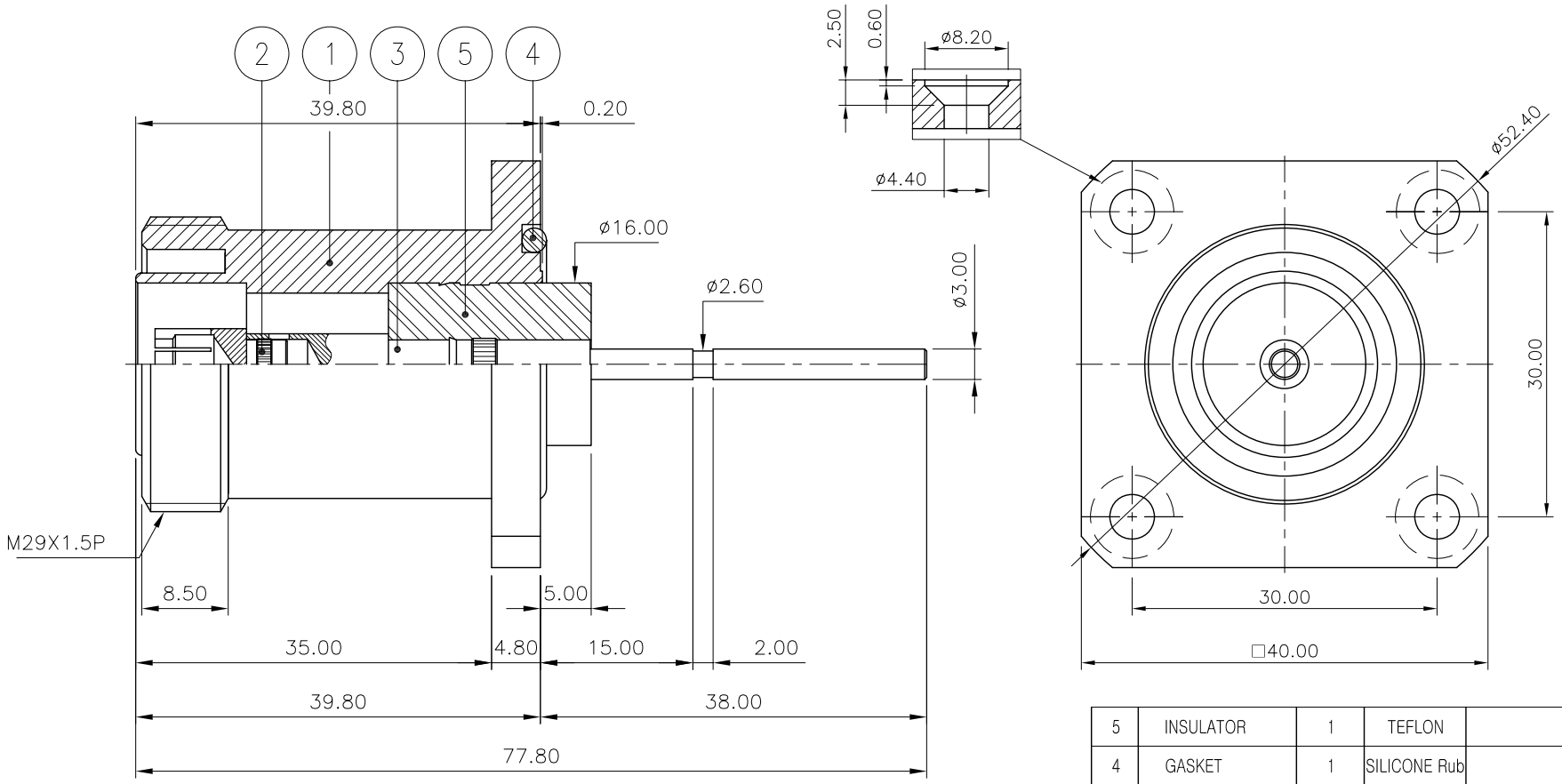

NO.	DESCRIPTION	Q'TY	MATERIAL	PLATING	CODE
5	INSULATOR	1	TEFLON		DIN02327-N/1
4	GASKET	1	SILICONE Rub		DGK00199-N/1
3	CONTACT	1	MBsBD	Silver 3.0㎛ min.	DCT03128-5/1
2	CONTACT	1	BeCu	Silver 3.0㎛ min.	DCT03091-5/1
1	BODY	1	MBsBD	SUCO 3.0㎛ min.	DBD03556-5/1

TOLERANCE	Decimal ±0.1	DATE	2014. 05. 12.
	Angle ±1°	APPROVED BY	I.C.KIM
		CHECKED BY	-
MATERIAL		DRAWN BY	M.H.SONG
FINISH		SCALE 1.5/1	UNIT mm

KJ COMTECH
KJ COMTECH CO.,LTD.
RF & MICROWAVE TECHNOLOGY
Tel : 82-32-347-8015
Fax : 82-32-347-8017

TITLE
7/16 DIN50 SOLDER END JS-4H

A4

DWG NO. CN03221-7/1

REVISION I R

SHEET 1 of 1